Gulf Coast Transit District

1415 North 33rd Street

Texas City, Texas 77590

Request for Proposals 2021 GCTD 009

VEHICLE MAINTENANCE SERVICES

REQUEST FOR PROPOSAL (RFP)

Issue Request for Proposal:	August 27, 2021
Deadline for Written Questions:	September 8, 2021
Issue Responses to Questions/Final Addendum:	September 13, 2021
Proposal Due Date & Time:	September 24, 2021, 1:00 p.m. CDT

Contact

Sean Middleton, Executive Director

smiddleton@gulfcoasttransitdistrict.com

(409) 359-7889

TABLE OF CONTENTS

Submittal Checklist 4
Part I – Notice for Publication 5
Notice 5
Schedule 5
Questions 5
Part II – Instructions to Proposers 6
1. Purpose 6
2. Proposal Requirements 6
3. Terminology 7
4. Scoring Criteria 7
5. Questions 7
6. Other Communication 8
7. Unsolicited Communication 8
8. Proposal Due Date and Time 8
Part III – Scope of Work 9
1. Intent 9
2. Statement of Work 9
3. Work Requirements 10
4. Administrative Contract 13
5. Reporting 13
6. Quality Assurance and Quality Control 13
Part IV – Laws, Regulations, and Mandatory Requirements 14
1. Funding: 14
2. Laws, Permits and Licenses 14
3. GCTD Business Code of Conduct 14
4. Conflict of Interest 14
5. Certificate of interested parties: 14
6. Federally Requireed Contract Clauses 15
7. Assignment 15
8. Delinquent State Business Tax 15
9. Procurement Priniciples and Standards of Conduct 15
10. Disadvantaged Business Enterprise (DBE) and Small Business Enterprise (SBE) 15
11. Sales Tax 16
12. Indemnification 16

13. Independent Contractor Relationship 16
Part V – General Conditions 17
1. Proposals 17
2. Request for Exceptions, Variations, and Approved Equals 18
3. Qualifications 19
4. Review and Evaluation Criteria 19
5. Protests 20
6. Contract 22
7. Price 22
8. Invoicing 22
9. Payment 23
10. Non-Appropriation 23
Exhibit A – Minimum Insurance Requirements 24
Exhibit B – GCTD Written Standards of Conduct 26
Exhibit C – Conflict of Interest Questionnaire 29
Exhibit D – Federally Required Contract Clauses 31
Exhibit E – Respondent Pre-Award Certifications 43
Lobbying Certification Form 44
Suspension and Debarment Certification Form 45
Respondent/Contractor Certification Form 47
DBE and SBE Subcontractor Letter of Intent 48
Delinquent State Business Tax Certification Form 49
Certificate of Interested Parties 50
Senate Bill 252 Certification 51
House Bill 89 Verification 52
Contractor Payment Report Form 53
Exhibit F – TxDOT PTN-130 54
Exhibit G – Acknowledgment of Addenda 68
Exhibit H – Respondent Information Form 69
Exhibit I – Price Proposal Form 76
Exhibit J – GCTD Vehicles List 85
Exhibit K – Vehicle Scheduled Services Checklists 88
Exhibit L - New Flyer Preventative Maintenance Manual 94

SUBMITTAL CHECKLIST

For a detailed list of items needed for the submittal, please see Proposal Requirements on Page 6.

Forms Included in this Request for Proposals (RFP) Needed for Submittal:

- ☐ Exhibit A, Minimum Insurance Requirements – Page 24
- ☐ Exhibit C, Conflict of Interest Questionnaire – Page 29
- ☐ Exhibit E, Respondent/Contractor Pre-Award Certifications – Page 43
- ☐ Exhibit F, TxDOT PTN-130 Forms – Page 54
- ☐ Exhibit G, Acknowledgment of Addenda – Page 68
- ☐ Exhibit H, Respondent Information Form – Page 69
- ☐ Exhibit I, Price Proposal Form – Page 76

PART I – NOTICE FOR PUBLICATION

NOTICE

Sealed Proposals for **Solicitation #2021-GCTD-009 – VEHICLE MAINTENANCE SERVICES** will be received by the Gulf Coast Transit District ("GCTD"), by e-mail until the Proposal Due Date and Time at the email address below. One (1) electronic version via email with proposal documentation clearly identified must be submitted.

Due: September 24, 2021 at 1:00 p.m. CDT

Gulf Coast Transit District
1415 North 33rd Street
Texas City, Texas 77590
E:mail: smiddleton@gulfcoasttransitdistrict.com, cc: compliance@gulfcoasttransitdistrict.com

The RFP will be available by August 27, 2021, and in electronic form at the following link: https://www.gulfcoasttransitdistrict.com/projects-3.

SCHEDULE

Issue Request for Proposals	August 27, 2021
Deadline for Written Questions at 5:00 p.m. CDT	September 8, 2021
Issue Response to Questions/Final Addendum	September 13, 2021
Proposals Due by 1:00 p.m. CDT	September 24, 2021
Award Contract to Successful Respondent	October 2021

GCTD reserves the right to revise the above schedule. Notice of date changes, addenda to the procurement or GCTD's responses to questions will be posted to https://www.gulfcoasttransitdistrict.com/projects-3.

QUESTIONS

All inquiries regarding this RFP should be directed to the Executive Director Sean Middleton (smiddleton@gulfcoasttransitdistrict.com), cc-ing Kara McManus, compliance@gulfcoasttransitdistrict.com.

Proposals received after the deadline will be rejected.

PART II – INSTRUCTIONS TO PROPOSERS

1. **PURPOSE**: The Gulf Coast Transit District, hereinafter "GCTD," seeks to contract with one or more qualified vehicle maintenance service providers, hereinafter "Respondents," to provide preventive and unscheduled vehicle maintenance services, hereinafter Services, for its fleet of transit vehicles. The Services include all necessary administration, equipment, facilities, maintenance, parts, supplies, and personnel required to perform the Services in compliance with all applicable contract, local, state and Federal Transit Administration (FTA) requirements.

2. **PROPOSAL REQUIREMENTS:**

2.1. The **PART III - SCOPE OF WORK** describes elements of the vehicle maintenance services required for this contract. The specifications herein may not have addressed all elements of a particular Respondent's maintenance services. Such omissions are not intended to mean that we do not desire to have that element as part of this procurement.

2.2. To achieve a uniform review process and obtain the maximum degree of comparability, the responses shall be organized in the manner specified below. **DO NOT** submit the entire RFP with your proposal. The original RFP with exhibits and all addenda will be provided in the executed Contract as an attachment.

2.3. Respondents are required to submit one (1) electronic version via email with proposal documentation clearly identified in the Notice For Publication.

2.4. Proposals that do not conform to the instructions given or which do not address all the requirements, as specified herein, may be eliminated from consideration. GCTD, however, reserves the right to accept such proposals if it is determined to be in the best interest of the GCTD. The proposal shall include:

2.4.1. Respondent Information: Respondent shall complete **EXHIBIT H, Respondent Information Form**, including the Respondent's information on the firm's financial resources and stability, subcontractor information and reference information. Please sign the form by firm official(s) with the authority to contractually bind the Respondent, with the name and title of the individual(s) signing the proposal clearly shown immediately below the signature(s). Please provide any needed additional information in this section.

2.4.2. Price Proposal: Complete and sign **EXHIBIT I, Price Proposal Form**, for all of the services that your firm is proposing.

2.4.3. Certifications and Forms: Respondent shall provide fully executed certifications and forms, as identified herein. Failing to provide the following certifications and forms may result in the Respondent being deemed non-responsive and removed from consideration for contract award.

2.4.3.1. Insurance: Respondent shall provide a Certificate of Liability Insurance. Further the sample contract includes provisions for submitting a Certificate of Insurance. However, all RFP submittals must include an Evidence of Insurance Certificate. A Certificate of Insurance will be requested at the time of final contracting if your Proposal is selected.

2.4.3.2. **Conflict of Interest Questionnaire**: If a conflict of interest exists between the Respondent or its subcontractors and the current GCTD Board of Directors members, the Respondent shall complete and submit **EXHIBIT C**. If a conflict does not exist, then respondent shall mark the questionnaire "no conflict of interest exists" and submit the exhibit.

2.4.3.3. **Acknowledgement of Addenda**: Acknowledgment of receipt of all addenda (completed **EXHIBIT G** and all individual acknowledgments enclosed with letter)

2.4.3.4. **Respondent Pre-award Certifications**: Respondent shall complete the checklist and all the required certifications included in **EXHIBIT E**.

2.4.3.4.1. Lobbying Certificate

2.4.3.4.2. Suspension and Debarment Certification

2.4.3.4.3. Respondent/Contractor Certification Form

2.4.3.4.4. DBE and SBE Subcontractor Letter of Intent

2.4.3.4.5. Delinquent State Business Tax Certification Form

2.4.3.4.6. House Bill 89 Verification

2.4.3.5. **TxDOT PTN-130:** Respondent shall complete the TxDOT PTN-130 Forms (**EXHIBIT F**).

3. **TERMINOLOGY**: By submitting a response to this solicitation, Respondents agree that the GCTD's standard definitions given within this document shall govern unless specifically provided otherwise in a separate agreement. Said definitions are subject to change without notice. It is the sole responsibility of Respondents to stay apprised of changes. The term Solicitation includes all documents that are included or referenced in the Solicitation package, including without limitation, the Request for Proposals, Instruction, Specifications, Scope of Work, General Conditions, and Required Clauses, Forms and Certifications. The terms Proposer and Contractor may be used interchangeably.

4. **SCORING CRITERIA**: Scoring of the responses shall be based on the following criteria:

Total period-of-performance cost of service	**40 points**
Experience, qualifications, quality of service (prior serviced vehicles' operational readiness), quality control procedures	**35 points**
Experience with transit vehicles and any needed certifications (towing, etc.)	**15 points**
Reputation among references	**10 points**
Total	**100 points**

5. **QUESTIONS**: The RFP Coordinator is the sole point of contact for this procurement from advertisement through award. All communications between the Respondent and the GCTD upon release of this RFP shall be with the RFP Coordinator and cc Kara McManus at compliance@gulfcoasttransitdistrict.com as follows:

Name	Sean Middleton
Position	Executive Director
E-Mail Address	smiddleton@gulfcoasttransitdistrict.com
Mailing Address	1415 North 33rd Street Texas City, Texas 77590
Phone Number	(409) 359-7889

6. **OTHER COMMUNICATION**: Any other communication will be considered unofficial and non-binding on the GCTD. No authority is intended or implied that specifications may be amended, or alterations accepted prior to proposal opening without written approval of the RFP Coordinator. Respondents are to rely on written statements issued by the RFP Coordinator only.

7. **UNSOLICITED COMMUNICATION**: To ensure fair evaluation of proposals, the GCTD prohibits unsolicited communications initiated by the Respondent to a GCTD representative who is evaluating or considering the proposals prior to Contract award. Communication between the Respondent and the GCTD will be initiated by the RFP Coordinator in order to obtain information or clarification needed to develop an accurate evaluation of the proposals. Unsolicited communication may be grounds for disqualifying the offending Respondent from consideration for award.

8. **PROPOSAL DUE DATE AND TIME:**

8.1. Emailed proposals are due to the GCTD no later than 1:00 p.m. on the date noted in **Part 1 – Notice to Proposers**.

8.2. Proposals received after the proposal deadline will not be considered under any circumstances.

1.1. Proposals shall not be opened publicly and shall be kept strictly confidential throughout the procurement process.

PART III – SCOPE OF WORK

1. **INTENT:** GCTD seeks one or more vehicle maintenance service providers, also referred to as Respondent(s) or Contractor(s), to provide preventive and unscheduled vehicle maintenance for the Galveston County fleet as well as unscheduled vehicle maintenance for the Brazoria County fleet, as specified in **EXHIBIT J, GCTD Vehicles List**. The vehicle maintenance services, referred to as Services, is inclusive of all necessary administration, equipment, facilities, maintenance, parts, supplies, and personnel required to perform the Services in compliance with all applicable contract, local, state and FTA requirements. Respondents may submit proposals for one or any combination of maintenance services among the following categories:

   1.1. Preventive Maintenance

   1.2. Vehicle Tire Replacement and Repair

   1.3. Unscheduled Maintenance

   1.4. Vehicle Towing

2. **STATEMENT OF WORK:** The Contractor shall perform work under the contract to meet or exceed the following requirements.

   2.1. Contractor shall provide all necessary administration, environmental disposal fees, equipment, facilities, maintenance, parts, supplies, and personnel required to perform scheduled and unscheduled vehicle maintenance in compliance with all applicable contract, local, state and FTA requirements. Contractor shall be responsible for furnishing all shop tools, mechanics tools/equipment, proper lifts, and tire change equipment, special diagnostic equipment and any other special equipment, tools or facility required to complete the vehicle maintenance including facilities and equipment for large cutaway buses and/or heavy duty vehicles.

      2.1.1. A typical ADA-compliant paratransit van has up to 21-foot length, 80-inch width, and 98-inch height.

      2.1.2. A typical large cutaway bus has up to a 25-foot length, 186-inch wheelbase, 96-inch width and 120-inch height. The gross vehicle weight ranges up to 14,500 pounds.

      2.1.3. A typical heavy-duty vehicle has up to a 40-foot length, 284-inch wheelbase, 102.5-inch width and 129-inch height. The gross vehicle weight ranges up to 42,540 pounds.

   2.2. Contractor shall complete all vehicle repairs in accordance with chassis, body, and component manufacturers' recommended practices. Repairs shall be conducted to Society of Automotive Engineers (SAE) and other relevant industry standards. Any modifications to the suspension or other parts of the vehicle shall require Contractor to provide certification that all Federal Motor Vehicle Safety Standards are met.

   2.3. Contractor shall use new Original Equipment Manufacturer (OEM) replacement parts, or approved equal parts, which comply with the OEM's requirements and/or specifications and are in production, but do not compromise any OEM warranties. Contractor shall also use new

supplies and materials to perform the work herein. Contractor shall not employ used, shopworn, demonstrator, prototype, or discontinued parts, supplies or materials.

2.4. Contractor shall certify that service technicians and/or mechanics are properly trained in accordance with industry standards. Contractor shall furnish documents showing certification and/or training for service technicians by SAE testing and diagnosis repair training. Automotive Service Excellence (ASE), National Automotive Parts Association (NAPA) and Service Technicians Society certification and training are acceptable. Where applicable, FTA and/or State of Texas (e.g., TxDOT) certifications for applicable training and certification may also be required.

3. WORK REQUIREMENTS:

3.1. Preventive Maintenance – Vans and Cutaway Buses

3.1.1. The Preventive Maintenance (PM) Program, including all multi-point inspections, is designed to identify any potential issues that may require immediate or future attention.

3.1.1.1. For any items requiring immediate repair and/or additional service, Contractor shall submit a written quotation, which is based on the pricing stated on **EXHIBIT I, Price Proposal Form,** for review and authorization by GCTD. Contractor shall not proceed without authorization from GCTD.

3.1.1.2. For any items requiring future repair and/or additional service, Contractor shall submit a written explanation of the item(s) and a written quotation, which is based on the pricing stated in the Contractor's **Price Proposal Form** (**EXHIBIT I**).

3.1.1.3. GCTD may elect to have immediate and future repairs performed by the Contractor tasked with the corresponding scheduled service that identified the need for repair or elect to have the repairs performed by another Contractor.

3.1.1.4. Requirements for services performed by the Contractor in support of the PM Program are specified in **EXHIBIT K, Vehicle Scheduled Services Checklists**.

3.1.2. 5,000 Mile Service. Contractor shall perform the 5,000 Mile Service, as scheduled by GCTD. The service shall include, and Contractor shall document, all items on the 5,000 Mile Service Checklist in **EXHIBIT K**.

3.1.3. 18,000 Mile Service. Contractor shall perform the 18,000 Mile Service, as scheduled by GCTD. The service shall include, and Contractor shall document, all items on the 18,000 Mile Service Checklist in **EXHIBIT K**.

3.1.4. Wheelchair Lift Inspection/Repair Program

3.1.4.1. Contractor shall perform the Wheelchair Lift Inspection as part of the 18,000 Mile Service, as scheduled by GCTD. The service shall include, and Contractor shall document, all items in the ADA Wheelchair Lift Inspection section of the 18,000 Mile Service Checklist in **EXHIBIT K**.

3.1.4.2. The servicing technician/mechanic shall hold a current certificate of course completion from either Braun Company or Ricon Company for Wheelchair ADA Transit Use Wheelchair and Standee Lift Operations and Maintenance Training prior to performing work under this activity.

3.2. Preventative Maintenance – Heavy Duty Vehicles

3.2.1. GCTD has two types of vehicles, as specified in **EXHIBIT J, GCTD Vehicles List,** which include Gilligs and New Flyers. All of the vehicles are maintained by the New Flyer preventative maintenance manual, including in **EXHIBIT L, New Flyer OEM Manual**. The selected Contractor shall perform preventative maintenance in accordance with the provided guidance. The selected Contractor must complete the preventative maintenance services within 100 miles of GCTD. With written approval from the GCTD, the Contractor is allowed to change the schedule from the guidance based on their expertise.

3.2.2. 5,000 Mile Service. Contractor shall perform the 5,000 Mile Preventative Maintenance, as scheduled by GCTD. Contractor shall complete the Preventative Maintenance Inspection Checklist, as specified in **EXHIBIT L**, or provided by the Contractor and approved by GCTD, for each scheduled/preventative maintenance and note all deficiencies. Contractor shall prepare a work order listing the work to be performed as part of the PM, estimated labor hours and parts and a quotation, which is based on the pricing in the cost proposal, for any deficiency requiring additional work.

3.2.3. 18,000 Mile Service. Contractor shall perform the 18,000 Mile Preventative Maintenance, as scheduled by GCTD. Contractor shall complete the Preventative Maintenance Inspection Checklist, as specified in **EXHIBIT L**, or provided by the Contractor and approved by GCTD, for each scheduled/preventative maintenance and note all deficiencies. Contractor shall prepare a work order listing the work to be performed as part of the PM, estimated labor hours and parts and a quotation, which is based on the pricing in the cost proposal, for any deficiency requiring additional work.

3.2.4. All Other Miles Checklist. Contractor shall perform the preventative maintenance work listed in the OEM manual at the mileage of 24,000, 30,000, 36,000, 42,000, 48,000, 60,000, 75,000, 100,000, 120,000, 150,000 and 200,000 Mile Preventative Maintenance as well as year-based maintenance, as scheduled by GCTD. Contractor shall complete the Preventative Maintenance Inspection Checklist, as specified in **EXHIBIT L**, or provided by the Contractor and approved by GCTD, for each scheduled/preventative maintenance and note all deficiencies.

3.3. Vehicle Tire Replacement and Repair

3.3.1. Contractor shall replace or repair tires based on tire condition, depth of tire tread, degree of tire damage and/or location of tire damage.

3.3.2. Replacement tires shall be Steel Belted Radials. The tire dimensions are:

3.3.2.1. Gillig Low floor bus - tire size:315/80R 22.5 - Annual mileage - 12,620

3.3.2.2. New Flyer/ Xcelsius - tire size:305/70R 22.5 & 275/80R 22.5 - Annual mileage - 25,599

3.3.2.3. Ford/ F-550 - StarCraft - tire size:225/70R 19.5 - Annual mileage - 53,103

3.3.2.4. Dodge/ Ram 3500 - tire size:225/75R 16 - Annual mileage - 46,177

3.3.2.5. Chevy 4500/ARBOC - tire size:225/75R 16 - Annual mileage - 36,381

3.3.2.6. Ford/ E-450/ Glaval - tire size:225/75R 16 - Annual mileage - 50,481

3.3.2.7. Chevy/ Uplander - tire size:225/60R 17 - Annual mileage - 30,000

3.3.2.8. Dodge/ Grand Caravan/ Amerivan - tire size:215/65R 16 - Annual mileage - 28,900

3.3.2.9. Ford/ E-450/ Goshen Bus - tire size:225/75R 16- Annual mileage – 50,000

3.3.3. GCTD is eligible for Government Pricing discounts.

3.3.4. Contractor shall add make, size, manufacturer, and price per tire to invoices for tires replaced.

3.4. Unscheduled Maintenance

3.4.1. Vehicle Tire Road Service

3.4.1.1. Contractor shall provide 24-hour vehicle tire road service throughout Galveston and Brazoria Counties.

3.4.1.2. Contractor shall respond within 90 minutes of any call for service.

3.4.1.3. Contractor shall perform tire repair or replacement at the location of disabled vehicle unless the work will take more than 60 minutes to complete, or conditions are unsafe for the Contractor or the driver or unsecure for the vehicle.

3.4.1.4. Contractor shall maintain all equipment, tools, replacement tires, supplies and materials on the responding vehicle.

3.4.1.5. Contractor shall provide a list of contact names and phone numbers for after-hours service to GCTD. Contractor shall also update the list periodically and provide a copy to GCTD.

3.4.1.6. Contractor shall dispose of fluids, tires and/or parts in accordance with regulatory requirements.

3.4.2. Mechanical Repair

3.4.2.1. Contractor shall perform repairs at Contractor's facility.

3.4.2.2. Contractor shall submit a written quotation based on the pricing stated in the Contractor's Price Proposal for review and authorization by GCTD. Contractor shall not proceed without authorization from GCTD.

3.4.2.3. On-demand repairs that are the result of a vehicle accident shall not be included in the Contract.

3.5. Vehicle Towing

3.5.1. Contractor shall provide towing service 24-hours per day, seven (7) days per week, including holidays, in Galveston and Brazoria Counties for any vehicle in **EXHIBIT J**. GCTD shall notify Contractor of changes to the vehicle lists.

3.5.2. Contractor shall respond within 90 minutes of any call for towing service.

3.5.3. For safety reasons, Contractor shall be required, upon request, to transport the driver and/or passenger(s) to the destination of the disabled vehicle. Contractor shall also be required, upon request, to wait with the driver and/or passenger(s) until another vehicle picks up the driver and passenger(s).

3.5.4. Contractor shall maintain the necessary permits from government authorities allowing operation of towing service within the areas Contractor is contracted to provide service.

3.5.5. Contractor shall disconnect drive shafts prior to towing any vehicle.

3.5.6. Contractor shall provide GCTD a list of contact names and phone numbers for after-hours towing service. Contractor shall update the list periodically or as changes occur and provide a copy to GCTD.

4. **ADMINISTRATIVE CONTRACT**: Contractor shall designate a primary point of contact for communicating with GCTD. The point of contact shall be accessible by work phone, cell phone and/or email. The point of contact must have contractual authority to act for Contractor.

5. **REPORTING:** Contractor shall generate a monthly DBE participation report, if DBE subcontractors are employed, and submit it to GCTD on **EXHIBIT E, Contractor Payment Report Form**, as an enclosure with the invoice.

6. **QUALITY ASSURANCE AND QUALITY CONTROL:** Contractor shall assure quality by complying with all manufacturers' guidance for maintaining and repairing GCTD's fleet vehicles and installing only OEM parts or approved equal parts. Contractor shall supervise all service technicians and mechanics to ensure all required accreditation is maintained and to verify work is performed to the standards established by SAE, ASE, NAPA, and Service Technicians Society.

PART IV – LAWS, REGULATIONS, AND MANDATORY REQUIREMENTS

1. **FUNDING:**

   1.1. The Services contract may be funded with federal funds from FTA, federal and state funds administered by TxDOT, and/or local funds. Use of federal and state grant funds requires GCTD and the successful Respondent to manage the Services within the grant guidelines and comply with all applicable federal and state regulations and requirements.

   1.2. Any contract awarded as a result of this procurement is contingent upon the availability of federal, state and/or local funding.

2. **LAWS, PERMITS AND LICENSES**: The successful Respondent shall comply with all federal, state, and municipal laws, ordinances, rules, regulations, and orders of any public authority bearing on the performance of the Contract, including but not limited to the laws referred to in the Contract and other Contract documents. Upon request, the successful Respondent shall furnish to GCTD certificates of compliance with all such laws, ordinances, rules, regulations, and orders. The successful Respondent shall be responsible for obtaining and keeping current all necessary federal, state, and local permits and licenses required for performance under the Contract.

3. **GCTD BUSINESS CODE OF CONDUCT:** The GCTD's employees, contractors, and volunteers will exhibit behavior based on honesty, integrity, and a sense of fairness. It is the responsibility of these individuals to maintain the highest standard of legal and ethical behavior. This includes complying with all local, state, and federal laws and regulations designed to assure adequate and appropriate care and taking timely and responsive positive action to prevent or correct any improper or inappropriate acts. The GCTD's Board of Trustees and Management are committed to providing avenues through which GCTD and its employees may raise, review, and resolve ethical issues openly and honestly. The successful Respondent shall comply with the same ethics requirements as detailed in **EXHIBIT B, Gulf Coast GCTD Business Code of Conduct**.

4. **CONFLICT OF INTEREST:** Effective January 1, 2006, Chapter 176 of the Texas Local Government Code (House Bill 914) requires that any vendor or person considering doing business with a local government entity disclose the vendor's or person's affiliation or business relationship that might cause a conflict of interest with a local government entity. Respondents shall fulfill this disclosure requirement by submitting with their proposal the completed form from **EXHIBIT C, Conflict of Interest Questionnaire**. Any attempt to intentionally or unintentionally conceal or obfuscate a conflict of interest may automatically result in the disqualification of the Respondent's proposal.

5. **CERTIFICATE OF INTERESTED PARTIES:** In 2015, the Texas Legislature adopted House Bill 1295, which added section 2252.908 of the Government Code. The law states that a governmental entity or state agency may not enter into certain contracts with a business entity unless the business entity submits a disclosure of interested parties (Form 1295), which is available at https://www.ethics.state.tx.us/whatsnew/elf_info_form1295.htm, to the governmental entity or state agency at the time the business entity submits the signed contract to the governmental entity or state agency. The GCTD requires the selected Contractor to file Form 1295 electronically with the Commission at the time of Contract Award.

6. **FEDERALLY REQUIREED CONTRACT CLAUSES:** The Services may be funded in part by the U.S. Department of Transportation (DOT), through the FTA and administered by TxDOT. As a result, the successful Respondent shall comply with all clauses in **EXHIBIT D, Federally Required Contract Clauses**, and complete the federally required forms in **EXHIBIT E, Respondent Pre-Award Certifications**.

7. **ASSIGNMENT:** The successful Respondent shall not sell, assign, transfer, or convey any contract resulting from this RFP, in whole or in part, without the prior written consent of the GCTD. The rights and duties awarded the successful Proposer shall not be assigned to another without the written consent of the GCTD Chief Financial Officer. Such consent shall not relieve the assigner of liability in the event of default by the assignee.

8. **DELINQUENT STATE BUSINESS TAX:** All Respondents shall certify in **EXHIBIT E, Respondent Pre-Award Certifications,** that the Respondent is not delinquent in a tax owed the state under Chapter 171, Tax Code, pursuant to the Texas Business Corporation Act, Texas Statutes, Article 2.45.

9. **PROCUREMENT PRINICIPLES AND STANDARDS OF CONDUCT:** Prohibited Acts of Contractors include:

   9.1. A Contractor, and its officers and employees, must arrive at its response to any GCTD procurement independently and without consultation, communication, or agreement for the purposes of restricting competition.

   9.2. A Contractor, and its officers and employees, may not have a relationship with any person, at the time of submitting its response to any GCTD or procurement or during the contract term, that may interfere with fair competition.

   9.3. A Contractor, and its officers and employees, may not participate in the development of specific criteria for award of the contract, nor participate in the selection of the response to be awarded the contract.

10. **DISADVANTAGED BUSINESS ENTERPRISE (DBE) AND SMALL BUSINESS ENTERPRISE (SBE):**

   10.1. The requirements of 49 CFR Part 26, Regulations of the U.S. DOT, apply to this contract as defined in **EXHIBIT D, Federally Required Contract Clauses**. It is the policy of the GCTD to practice nondiscrimination based on race, color, sex or national origin in the award or performance of this contract. All firms qualifying under this solicitation are encouraged to submit proposals. Award of this contract will be conditioned on satisfying the requirements of this RFP. The Respondent is encouraged to utilize services of DBE Banks and Financial Institutions.

   10.2. The Respondent is required to document all subcontractor participation including non-DBE subcontractors by completing the Respondent/Contractor Pre-Award Certification in **EXHIBIT E, Respondent Pre-Award Certifications**. Award of this contract is conditioned on submission of the following information with the proposal:

      10.2.1. Names and addresses of subcontractors that will participate in the contract

      10.2.2. Description of the work that each subcontractor will perform

      10.2.3. Subcontractors' status as DBE, SBE or non-DBE/SBE

10.2.4. Ethnic code, as described in the form

10.2.5. Age of the firm

10.2.6. Annual gross receipts from the firm

10.2.7. Dollar amount of the participation of each DBE firm participating

10.2.8. Written confirmation from the DBE and/or SBE on the DBE and SBE Subcontractor Letter of Intent in **EXHIBIT E, Respondent Pre-Award Certifications**

11. **SALES TAX:** The GCTD is exempt from all federal excise, state, and local taxes unless otherwise stated in this document. The GCTD claims exemption from all sales and/or use taxes under Texas Tax Code §151.309, as amended. Tax Exemption Certificates will be furnished upon request. Respondents shall not include taxes in their price proposals and the successful Respondent shall not include taxes on their invoices.

12. **INDEMNIFICATION:** Contractor shall indemnify and hold harmless the GCTD against any and all claims, demands, suits, associated attorney's fees, and judgments of sums of money to any party for loss of life or injury or damage to person or property growing out of, resulting from, or by reason of any negligent act of omission, operation, or work of Contractor, its subcontractors, agents, servants, or employees while engaged upon or in connection with the services required or performed by Contractor hereunder. Contractor shall indemnify and hold harmless the GCTD, its officers, agents, and employees from any loss, damage, liability, suits, judgments, or expense because of damage to property or injuries to persons (including death) and including costs of defense (including, but not limited to, attorneys' fees) to the extent arising from any negligent act, omission, or breach on the part of Contractor, its subcontractors, agents, employees, and subconsultants, in connection with this Contract, or from any breach of any obligations under this Contract.

13. **INDEPENDENT CONTRACTOR RELATIONSHIP:** Respondent is and shall perform the Services as an independent contractor, and as such shall have and maintain complete control over all its employees, agents, and operations. Neither Respondent nor anyone employed by the Respondent shall be, represent, act, purport to act, or be deemed to be the agent, representative, employee, or servant of the GCTD.

PART V – GENERAL CONDITIONS

1. PROPOSALS:

1.1. Acceptance/Rejection: The GCTD reserves the right to accept or reject any and/or all proposals for any or all services covered in this RFP. The GCTD makes no warranty or guarantee that an award will be made as a result of this RFP.

1.2. Addenda: The GCTD reserves the right to modify, waive any formalities or minor technical inconsistencies in, and delete any requirement, excluding mandatory requirements from this RFP prior to the date and time of the proposal deadline. Any modifications, waivers, interpretations, corrections, or changes to the RFP shall be made by written addenda. Sole issuing authority of addenda shall be vested in the RFP Coordinator. Addenda shall be sent to all who are known to have received a copy of the RFP. All such addenda become, upon issuance, an inseparable part of the RFP, and must be met for the Respondent's proposal to be considered responsive. Respondents shall acknowledge receipt of all addenda by completing **EXHIBIT G, Acknowledgment of Addenda**, and submit the acknowledgment with Respondent's proposal. If Respondent fails to acknowledge receipt of all addenda, then that Respondent is considered non-responsive to the RFP and the GCTD may reject Respondent's proposal. Material or cardinal changes to the RFP after the proposal deadline may result in cancellation of the solicitation without award of a contract.

1.3. Content: Representations made by Respondent within its proposal shall be binding. Except as approved by the GCTD, any proposal that fails to comply with the proposal requirements contained herein will be rejected.

1.4. Valid: The Respondent's proposal shall be valid for a period of 90 days. Failure of the Respondent to enter into a contract within 30 calendar days of being notified as the successful Respondent will render the proposal invalid, at the GCTD's sole option.

1.5. Preparation: The GCTD will not be liable for any costs incurred by any Respondent for preparing a response to this RFP. Respondents submit proposals at their own risk and expense. All proposals and their accompanying documentation will become the property of the GCTD.

1.6. Changes:

1.6.1. Respondent may make any corrections, deletions, or additions to proposals in writing prior to the date and time of the proposal deadline. The Respondent shall submit substitute pages in the appropriate number of copies with a letter documenting the changes and the specific pages for substitution. The signature on the letter must be original and of equal authority as the signature on the original proposal. No oral, telephone, fax, e-mail, or other electronically transmitted corrections, deletions, or additions shall be accepted.

1.6.2. Respondent may not alter or amend proposals after proposals are opened. A Respondent may reduce its price provided that the Respondent is the lowest or best value Respondent and is otherwise entitled to award.

1.7. Withdrawal: A proposal shall not be withdrawn or canceled by the Respondent unless the Respondent submits a letter prior to the date and time of the proposal deadline. The signature on the withdrawal letter must be original and must be of equal authority as the signature of the proposal.

1.8. Clarification: The GCTD reserves the right to request clarification or additional information specific to any proposal after all proposals have been received and the RFP deadline has passed.

1.9. Confidentiality of Content:

1.9.1. All documents submitted in response to a solicitation shall be subject to the Texas Public Information Act. Following an award, responses are subject to release as public information unless the response or specific parts of the response can be shown to be exempt from the Texas Public Information Act. Pricing is not considered to be confidential under any circumstances.

1.9.2. Information in a submittal that is legally protected as a trade secret or otherwise confidential must be clearly indicated with "CONFIDENTIAL" written on that section of the document. The GCTD will not be responsible for any public disclosure of confidential information if it is not clearly marked as confidential.

1.9.3. If a request is made under the Texas Public Information Act to inspect information designated as confidential, the Respondent shall, upon request from the GCTD, furnish written justification explaining why the information should be protected from disclosure. The matter will then be presented to the Attorney General of Texas for final determination.

2. REQUEST FOR EXCEPTIONS, VARIATIONS, AND APPROVED EQUALS:

2.1. Respondents requesting exception to or variation from the services, terms, and conditions in the RFP and/or offering product substitutions shall submit these exceptions and/or substitutions on **EXHIBIT H, Respondent Information Form**. Requests that may alter the delivery of Service are due no later than the date listed as due date for written questions listed in the Solicitation Schedule.

2.2. The GCTD is the final authority of approval or denial of the request(s). All approvals will be issued by the RFP Coordinator as addenda, as specified herein, no later than the deadline for Issuing Response to Questions/Final Addendum, as specified herein. The GCTD reserves the right to accept any or none of the exception(s), variation(s) and/or product substitution(s) as deemed to be in the best interest of the GCTD.

2.3. Any catalog, brand name, or manufacturer's reference used in the RFP is descriptive only (not restrictive) and is used to indicate type and quality required. Request for approved equals with similar nature and quality will be considered subject to the conditions listed in **Part III, Scope of Work**.

2.4. If a Respondent takes no exception to or variation from the specifications, terms, and conditions in the RFP and/or does not offer product substitutions, the successful Respondent will be required to comply with all services, terms, conditions, and products as specified herein.

2.5. Respondent may appeal a denied request in writing and received by the GCTD not less than 48 hours prior to the proposal deadline. The GCTD will not consider appeals received after the proposal deadline.

3. QUALIFICATIONS:

3.1. The opening of a solicitation shall not be construed as acceptance by the GCTD of Respondent as qualified, responsive, and responsible.

3.2. All Respondents shall:

3.2.1. Be firms, corporations, individuals, or partnerships normally engaged in the provision of the services specified herein.

3.2.2. Have adequate organization, facilities, equipment, and personnel to ensure prompt and efficient services to GCTD.

3.2.3. Identify any subcontractors to be used for this project. Experience, qualifications, and references of the subcontractors shall be submitted. The GCTD reserves the right to approve or disapprove subcontractors prior to any work being performed.

4. REVIEW AND EVALUATION CRITERIA:

4.1. The GCTD shall review all proposals to determine the proposals that are responsive to the RFP submission requirements and the Respondents who are responsible sources.

4.1.1. A responsive proposal is one that follows the RFP requirements, includes all requested documentation, is submitted in the format outlined, is submitted by the proposal deadline, and has the appropriate pre-award certifications and forms completed with signatures as required on each document. Failure to comply with these requirements may result in the proposal being deemed nonresponsive.

4.1.2. To determine the responsible qualified Respondents, the GCTD shall consider: integrity and business ethics; suspension and debarment; compliance with Civil Rights, FTA DBE requirements and public policies of the Federal Government; organization, experience, accounting, operational controls, and technical skills; record of current and past performance; financial resources; compliance with applicable licensing and tax laws and regulations; necessary maintenance and technical equipment and facilities; and compliance with the required delivery or performance schedules.

4.2. All proposals received shall be evaluated by a committee based on criteria developed by GCTD as stated in this RFP.

4.3. Respondents may be required to make an oral presentation to the evaluation committee to further present their qualifications. These presentations shall provide the Respondent the opportunity to clarify their response and ensure a mutual understanding of the Service to be provided. In addition, the evaluation committee may visit the respondent's operations and make judgments directly affecting the evaluation of the proposal.

4.4. Submission of a proposal implies the Respondent's acceptance of the evaluation criteria and Respondent's recognition that subjective judgments must be made by the evaluating committee.

4.5. Contract Negotiations: In establishing a Contract as a result of the evaluation process, the GCTD shall prepare and submit a draft contract to the successful Respondent(s). The successful Respondent(s) shall have sufficient to review and provide comments to the GCTD. The GCTD may consider any comments that do not substantively change the terms and conditions in the RFP and the Respondent's proposal.

5. PROTESTS:

5.1. Any interested party who is aggrieved in connection with the solicitation, evaluation, or award of an Agreement may file a protest with the Transportation Manager, herein after, Manager, and appeal any adverse decision to the Executive Director, herein after Director. Such protest must be in writing and submitted to the Manager as follows:

5.2. Pre-Bid / Pre-Proposal Protests: Protests pertaining to the terms, conditions or proposed form of procurement must be received by the Manager within five (5) business days prior to the date established for the opening of bids or receipt of responses. Untimely, or late protests, will not be considered, unless the Manager concludes that the issue(s) raised by the protest involves fraud, gross abuse of the procurement process, or otherwise indicates substantial prejudice to the integrity of the procurement system. Submit all protests to:

Gulf Coast Transit District
1415 33rd Street North
Texas City, Tx 77590

5.3. Post-Award Protests: Protests concerning award decisions, including bid evaluations, must be received by the Manager within five (5) business days after award has been made and recognized by the Board. Untimely, or late protests, will not be considered, unless the Manager concludes that the issue(s) raised by the protest involves fraud, gross abuse of the procurement process, or otherwise indicates substantial prejudice to the integrity of the procurement system.

5.4. Interested Parties: For the purposes of this procedure, "interested parties" shall be defined as follows:

5.4.1. For Pre-Bid / Pre-Proposal Protests concerning the terms, conditions or form of a proposed procurement, any prospective Respondent whose direct economic interest would be affected by the award, or failure to award an Agreement.

5.4.2. For Post-Award Protests concerning award decisions, only those actual Respondents, who have submitted a response to this solicitation and who, if their complaint is deemed by the GCTD to be meritorious, would be eligible for selection as the successful Respondent for award of an Agreement.

5.5. All formal protests shall be signed, notarized, and reference the following:

5.5.1. Name, address, and telephone number of the interested party;

5.5.2. Solicitation number and title;

5.5.3. Specific statutory or regulatory provision(s) that the action under protest is alleged to have violated;

5.5.4. Specific description of each act alleged to have violated the statutory or regulatory provision(s) identified above.

5.5.5. Precise statement of facts.

5.5.6. Identification of the issue(s) to be resolved.

5.5.7. Argument and authorities in support of the protest.

5.6. The Manager shall have the authority, prior to any appeal to the Director, to settle any dispute and resolve the protest. The Manager may solicit written responses regarding the protest from other interested parties. If the protest is not resolved by mutual agreement, the Manager will issue a written determination on the protest.

5.7. If the Manager determines that no violation of rules or statutes has occurred, he shall so inform the protesting party, and at his discretion, other interested parties by letter which sets forth the reasons for the determination.

5.8. If the Manager determines that a violation of the rules or statutes has occurred and an Agreement has not yet been awarded, he shall so inform the protesting party, and at his discretion, other interested parties by letter which sets forth the reasons for the determination and the appropriate remedial action.

5.9. If the Manager determines that a violation of the rules or statutes has occurred and an Agreement has been awarded, he shall so inform the protesting party, and at his discretion, other interested parties by letter which sets forth the reasons for the determination, which may include ordering of the Agreement void.

5.10. If the protest is not resolved by mutual agreement, the Manager will issue a written determination on the protest within thirty (30) days.

5.11. Appeals: The Manager's determination on a protest may be appealed to the Attorney. An appeal to the Attorney must be received no later than ten (10) business days after the date of the written determination issued by the Manager and be addressed as stated above of this procedure and sent via certified mail. The appeal shall be limited to a review of the determination made by the Manager.

5.12. The Director and Attorney/Legal Counsel for the GCTD will review the protest, the Manager's determination, any responses from interested parties, and the appeal, and prepare a written response to the protesting party.

5.13. The Director's response shall be the final administrative action taken by the GCTD.

5.14. Any protest submitted must follow these procedures or it will be returned without action.

5.15. **FTA Review:** The FTA may review protests that allege the GCTD failed to follow the protest procedures herein and may review or refer protests that allege violation of federal, state, and local law or regulation. The interested party must file the protest in accordance with FTA Circular 4220.1F, Third Party Contracting Guidance.

6. CONTRACT:

6.1. Contract Award: The successful Respondents will be required to execute a Contract with the GCTD which finalizes the terms and conditions set forth in the requirements of this RFP and the successful Respondents' proposals, for three (3) years from the effective date of the contract. No award can be made until the governing board, the GCTD Board of Trustees, considers and approves execution of the contract. Multiple awards may be made at the sole discretion of GCTD. The Contract term shall start from the effective date of Contract.

6.2. Contract Extension: Prior to the expiration of the Contract, GCTD reserves the right to extend the Contract for up to two (2) one-year terms. GCTD also reserves the right to extend the Contract up to 90 days past the Contract term or extension term(s) and require the Contractor to perform all services at the rate set forth in the initial contract or contract extension(s).

6.2.1. Review Contractor performance, price, continuing need for Contractor's service, advancements in technologies or service, and any other conditions that impact the effectiveness or efficiency of the Services prior to the end of each extension period.

6.2.2. Terminate the Contract with or without cause or may continue through the full term of the Contract.

6.3. Contractor recognizes the Services as vital to GCTD and shall be continued without interruption. Upon the expiration of the Agreement, a successor Contractor or GCTD may continue the Service. Contractor agrees to cooperate with the successor Contractor or GCTD to affect a timely transition to a successor.

7. PRICE:

7.1. The successful Respondents' pricing shall be firm for the duration of the base Contract and extensions, as submitted on the final Price Proposal Form. The Contract price shall be limited based on the GCTD's budget for the Services with the successful Respondent(s). The GCTD is requesting the respondent to complete and submit its price proposal based on the costs listed in **the Scope of Work.**

7.2. The GCTD may consider adjustments to the price for added federal governmental requirements related to Homeland Security or other mandated federal requirements. Requests for price adjustments must be submitted in writing by the Contractor. All price increases are subject to the GCTD's written approval before they become effective.

8. INVOICING:

8.1. Contractor shall submit one (1) original invoice and one (1) copy after services are rendered. Invoices shall be delivered no less frequently than a monthly basis to:

Gulf Coast Transit District
1415 North 33rd Street

Texas City, Texas 77590

8.2. The invoice shall not be deemed complete, and payment shall not be authorized unless GCTD formally accepts the service and the monthly DBE Participation Report, if applicable, and submit it to the GCTD with the invoice.

9. PAYMENT:

9.1. In accordance with Chapter 2251, V.T.C.A., Texas Government Code, any payment to be made by the GCTD to the contractor will be made promptly within thirty (30) days of the date the GCTD receives a correct invoice, as specified herein, for Service rendered, formally accepts the vehicle(s) or service and the invoice includes the documents specified above in Section 5.2.

9.2. The Contractor may charge interest on an overdue payment at the "rate in effect" on September 1 of the fiscal year in which the payment becomes overdue, in accordance with V.T.C.A., Texas Government Code, Section 2251.025(b). This Prompt Payment Policy does not apply to payments made by the GCTD in the event:

9.2.1. There is a bona fide dispute between GCTD and the Contractor about the Service rendered that causes the payment to be late.

9.2.2. There is a bona fide dispute between the Contractor and a subcontractor about the Service rendered that causes the payment to be late.

9.2.3. The terms of a federal contract, grant, regulation, or statute prevent the GCTD from making a timely payment with federal funds.

9.2.4. The invoice is not submitted to the GCTD in strict accordance with any instruction herein relating to the invoice.

10. NON-APPROPRIATION: Contract shall be a commitment of the GCTD's current revenues only. It is understood and agreed the GCTD shall have the right to terminate the Contract at the end of any fiscal year if the governing body does not appropriate funds sufficient to purchase the estimated yearly Services, as determined by the GCTD's budget for the fiscal year in question. The GCTD may affect such termination by giving the Contractor a written notice of termination at the end of the current fiscal year.

EXHIBIT A – MINIMUM INSURANCE REQUIREMENTS

A. The Respondent/Contractor shall, at all times during the term of this contract, maintain insurance coverage with not less than the type and requirements shown below. Such insurance is to be provided at the sole cost of the respondent/contractor. These requirements do not establish limits of the Respondent/Contractor's liability.

B. All policies of insurance shall waive all rights of subrogation against GCTD, its officers, employees, and agents.

C. Upon request, certified copies of original insurance policies shall be furnished to GCTD.

D. GCTD reserves the right to require additional insurance should it is deemed necessary.

E. Before commencing the work, and as a condition precedent to beginning and for payment for the work, Respondent/Contractor shall furnish GCTD with an insurance certificate showing the following coverages with minimum limits of liability and other conditions as follows:

   a. Type of Coverage: A. Workers' Compensation

   b. Policy Limits: State Statutory Policy Form – Statutory Employer's Liability - $1,000,000.

   c. Type of Coverage: B. Commercial General Liability:

   d. To include coverage for Independent Contractors, Products and Completed Operations (extending for at least twenty-four months after completion of operations). Personal Injury Liability.

   e. Policy Limits: Coverage with limits not less than Three Hundred Twenty-five Thousand Dollars ($325,000) for Bodily Injury each occurrence and in the aggregate and One Hundred Fifty Thousand Dollars ($150,000) for Property Damage each occurrence and in the aggregate.

   f. Type of Coverage: C. Comprehensive Automobile Liability:

   g. To include coverage for owned, non-owned, and hired vehicles.

   h. Policy Limits: Coverage shall include all owned, hired, and non-owned automobiles used in connection with the contract with limits not less than One Hundred Thousand Dollars ($100,000) Bodily Injury each person, subject to a Three Hundred Thousand Dollars ($300,000) Bodily Injury each occurrence and Twenty-five Thousand ($25,000) Property Damage Liability each occurrence.

F. **Subcontractors.** Subcontractor(s) shall obtain and maintain the insurance at its expense and for the duration of its work.

G. **Proof of Insurance**. The policies, coverages and endorsements required by this provision shall be shown on a Certificate of Insurance on which the Agency must be listed as an Additional Insured party (excluding professional liability or employer's liability) and the Certificate Holder, and which

should be furnished to the Agency prior to the commencement of this Agreement. All such insurance shall be secured and maintained with an insurance company, or companies, licensed to do business in the State of Texas. The Agency may withhold payments under the terms of this Agreement until the Contractor furnishes the Agency copies of all Certificates of Insurance from the insurance carrier, or carriers, showing that such insurance is in full force and effect.

H. **Cancellation**. New Certificates of Insurance shall be furnished to the Agency at the renewal date of all policies named on these Certificates. Contractor shall give the Agency thirty (30) days prior written notice of any proposed cancellation of any of the above-described insurance policies.

EXHIBIT B – GCTD WRITTEN STANDARDS OF CONDUCT

POLICY STATEMENT

The GCTD Code of Conduct establishes minimum standards of conduct that Board, officers, employees, agents, and contractors of the GCTD are expected to follow in the performance of their duties specifically related to selection, award and/or administration of any contract supported by FTA or TxDOT funds.

STANDARDS OF CONDUCT

The GCTD's Board and its officers, employees, agents, and contractors shall abide by this code when participating in the selection, award and/or administration of any contract supported by FTA or TxDOT funds.

The governing board shall be responsible for oversight of the GCTD's compliance with the Ethics Compliance and Code of Conduct Policy.

A GCTD Board Member, executive staff, or employee who violates any provision of the GCTD Ethics Compliance and Code of Conduct Program policy, is subject to disciplinary action up to and including termination. A GCTD Board Member, executive staff, or employee, who violates any applicable federal or state law or rule may be subject to civil or criminal penalties in addition to any disciplinary action.

All Board Members, executive staff, or employees shall perform their official duties in a lawful, professional, and ethical manner; practice responsible stewardship of organizational resources and report any conduct or activity that they believe to be in violation of this policy.

Board Members shall not knowingly make false or misleading statements, oral or written, while conducting of GCTD business. GCTD Board Members shall not disclose confidential or sensitive GCTD business information without prior written authorization.

Any elected officials, officers, employees, agents, or contractors of the GCTD who discloses a conflict of interest, real, apparent or potential, shall recuse themselves from any further participation in selection, award or administration of a contract supported by FTA or TxDOT funds.

Only authorized elected officials, officers, employees, agents, or contractors of the GCTD will communicate details of any active procurement or solicitation to any person or entity.

ABSOLUTE PROHIBITIONS

No elected official, officer, employee, agent, or contractor of the GCTD shall participate in selection, award or administration of a contract supported by FTA or TxDOT funds if a conflict of interest, real, apparent or potential, is involved. Such a conflict would arise when:

- Engage in any activity that would create a conflict of interest or even the appearance of a conflict.
- Make personal investments in any enterprise that would create a substantial conflict between the Board Member's private interest and the GCTD.
- Engage in outside business or professional activities or accept employment if the activities create a conflict between the Board Member's private interest and the GCTD; use or appear to use

information obtained in connection with the Board Member duties for GCTD or could be expected to impair the Board Member's independence of judgment in the performance of the GCTD duties.

An elected official, officer, employee, agent, or contractor of the GCTD, their immediate family and/or partner shall neither solicit nor accept gifts, gratuities, favors or anything of monetary value from any firm being considered for a contract award or any firm benefiting from a contract award.

DISCLOSURES

On a procurement-by-procurement basis, any elected official, officer, employee, agent, or contractor of the GCTD who participates in selection, award or administration of a contract supported by FTA funds shall complete and sign a Procurement Disclosure Form prior to evaluation of the proposal. Any elected official, officer, employee, agent, or contractor who discloses a conflict of interest shall recuse themselves from the selection, award, or administration of the contract.

On a procurement-by-procurement basis, any elected official, officer, employee, agent, or contractor of the GCTD who participates in the evaluation of a competitive proposal and subsequent recommendation for a contract award shall complete and sign a Non-disclosure Form prior to evaluation of the proposal.

Effective January 1, 2006, Chapter 176 of the Texas Local Government Code (House Bill 914) requires that any vendor or person considering doing business with a local government entity disclose the vendor or person's affiliation or business relationship that might cause a conflict of interest with a local government entity. Any vendor or person considering doing business with the GCTD shall complete and sign the Conflict Of Interest Questionnaire and the Certificate of Interested Parties and submit the questionnaire and the certificate as instructed in the Invitation for Bids or the Request for Proposal.

CONFLICTS OF INTEREST

Conflict of interest is a situation in which one's private interest (most often financial in nature) conflict with or raises a reasonable question of conflict with their job-related duties and responsibilities. Importantly, if someone violates a Conflict of Interest law, they face civil and/or criminal charges resulting in monetary fines or jail time.

GIFTS AND HONORARIA

GCTD Board Members, Executive Staff and Employees should always ask themselves whether it is appropriate to accept something from a person who wants, or may want, or may be seen to want, an official favor within their authority. It is unethical to accept or give a gift that is meant to sway a decision in favor of the gift-giver.

Under Tex. Local Gov. Code Chapter 176, a local government officer must disclose a vendor's offer of gifts to the officer or to the officer's family member worth $250 or more using the Conflict of Interest Form approved by the Texas Ethics Commission. The Form requires disclosure even if the officer refuses the gift. An officer commits a Class C misdemeanor if the officer knowingly violates the disclosure requirements.

GIVING GIFTS OR HONORARIA TO STATE EMPLOYEES

State employees are legally and ethically prohibited from accepting gifts and honoraria, except in very limited situations. Employees may be held criminally liable for offering or conferring any benefit to a state employee in exchange for the recipient's decision, opinion, recommendation, vote, or other exercise of

discretion as a public servant. "Benefit" means anything reasonably regarded as financial gain or financial advantage, including a benefit to any other person in whose welfare the beneficiary has an interest.

PENALTIES

In addition to turning over evidence of misconduct to the proper law enforcement agency when appropriate, the following penalties may be enforced:

- The failure of a Board to comply with the requirements of this policy shall constitute grounds for censure or removal from the Boar in accordance with Section 451.511 of the Texas Transportation Code.
- The failure of an employee to comply with the requirements of this policy shall result in disciplinary action up to and including termination.
- The failure of an agent or contractor of the GCTD to comply with this policy shall be grounds for such contractual remedy, as may be appropriate, up to and including termination of the contract and debarment of the agent or contractor.

MITIGATION TECHNIQUES

- **Avoid** - Prevent the occurrence of an actual or potential conflict of interest through actions such as excluding sources or eliminating a segment of work from task to eliminate the potential for a conflict of interest.
- **Neutralize** - Negate potential or actual conflict of interest related to (1) contractor objectivity during contract performance or (2) an unfair competitive advantage. Specific actions would include encouraging/facilitating support contractor recusal, excluding/severely limiting support contractor participation in source selection activities, and otherwise barring access to competition sensitive data.
- **Mitigate** - Reduce or alleviate the impact of unavoidable conflict of interests to an acceptable level of risk so that the Government’s interests to fair competition and/or contract performance are not prejudiced.

EXHIBIT C – CONFLICT OF INTEREST QUESTIONNAIRE

CONFLICT OF INTEREST QUESTIONNAIRE **FORM CIQ**
For vendor doing business with local governmental entity

This questionnaire reflects changes made to the law by H.B. 23, 84th Leg., Regular Session.

This questionnaire is being filed in accordance with Chapter 176, Local Government Code, by a vendor who has a business relationship as defined by Section 176.001(1-a) with a local governmental entity and the vendor meets requirements under Section 176.006(a).

By law this questionnaire must be filed with the records administrator of the local governmental entity not later than the 7th business day after the date the vendor becomes aware of facts that require the statement to be filed. *See* Section 176.006(a-1), Local Government Code.

A vendor commits an offense if the vendor knowingly violates Section 176.006, Local Government Code. An offense under this section is a misdemeanor.

OFFICE USE ONLY
Date Received

1 **Name of vendor who has a business relationship with local governmental entity.**

2 ☐ **Check this box if you are filing an update to a previously filed questionnaire.** (The law requires that you file an updated completed questionnaire with the appropriate filing authority not later than the 7th business day after the date on which you became aware that the originally filed questionnaire was incomplete or inaccurate.)

3 **Name of local government officer about whom the information is being disclosed.**

_____
Name of Officer

4 **Describe each employment or other business relationship with the local government officer, or a family member of the officer, as described by Section 176.003(a)(2)(A). Also describe any family relationship with the local government officer. Complete subparts A and B for each employment or business relationship described. Attach additional pages to this Form CIQ as necessary.**

A. Is the local government officer or a family member of the officer receiving or likely to receive taxable income, other than investment income, from the vendor?

☐ Yes ☐ No

B. Is the vendor receiving or likely to receive taxable income, other than investment income, from or at the direction of the local government officer or a family member of the officer AND the taxable income is not received from the local governmental entity?

☐ Yes ☐ No

5 **Describe each employment or business relationship that the vendor named in Section 1 maintains with a corporation or other business entity with respect to which the local government officer serves as an officer or director, or holds an ownership interest of one percent or more.**

6 ☐ Check this box if the vendor has given the local government officer or a family member of the officer one or more gifts as described in Section 176.003(a)(2)(B), excluding gifts described in Section 176.003(a-1).

7

_____ _____
Signature of vendor doing business with the governmental entity Date

Form provided by Texas Ethics Commission www.ethics.state.tx.us Revised 11/30/2015

CONFLICT OF INTEREST QUESTIONNAIRE
For vendor doing business with local governmental entity

A complete copy of Chapter 176 of the Local Government Code may be found at http://www.statutes.legis.state.tx.us/Docs/LG/htm/LG.176.htm. For easy reference, below are some of the sections cited on this form.

Local Government Code § 176.001(1-a): "Business relationship" means a connection between two or more parties based on commercial activity of one of the parties. The term does not include a connection based on:

(A) a transaction that is subject to rate or fee regulation by a federal, state, or local governmental entity or an agency of a federal, state, or local governmental entity;

(B) a transaction conducted at a price and subject to terms available to the public; or

(C) a purchase or lease of goods or services from a person that is chartered by a state or federal agency and that is subject to regular examination by, and reporting to, that agency.

Local Government Code § 176.003(a)(2)(A) and (B):

(a) A local government officer shall file a conflicts disclosure statement with respect to a vendor if:

***

(2) the vendor:

(A) has an employment or other business relationship with the local government officer or a family member of the officer that results in the officer or family member receiving taxable income, other than investment income, that exceeds $2,500 during the 12-month period preceding the date that the officer becomes aware that

(i) a contract between the local governmental entity and vendor has been executed; or

(ii) the local governmental entity is considering entering into a contract with the vendor;

(B) has given to the local government officer or a family member of the officer one or more gifts that have an aggregate value of more than $100 in the 12-month period preceding the date the officer becomes aware that:

(i) a contract between the local governmental entity and vendor has been executed; or

(ii) the local governmental entity is considering entering into a contract with the vendor.

Local Government Code § 176.006(a) and (a-1)

(a) A vendor shall file a completed conflict of interest questionnaire if the vendor has a business relationship with a local governmental entity and:

(1) has an employment or other business relationship with a local government officer of that local governmental entity, or a family member of the officer, described by Section 176.003(a)(2)(A);

(2) has given a local government officer of that local governmental entity, or a family member of the officer, one or more gifts with the aggregate value specified by Section 176.003(a)(2)(B), excluding any gift described by Section 176.003(a-1); or

(3) has a family relationship with a local government officer of that local governmental entity.

(a-1) The completed conflict of interest questionnaire must be filed with the appropriate records administrator not later than the seventh business day after the later of:

(1) the date that the vendor:

(A) begins discussions or negotiations to enter into a contract with the local governmental entity; or

(B) submits to the local governmental entity an application, response to a request for proposals or bids, correspondence, or another writing related to a potential contract with the local governmental entity; or

(2) the date the vendor becomes aware:

(A) of an employment or other business relationship with a local government officer, or a family member of the officer, described by Subsection (a);

(B) that the vendor has given one or more gifts described by Subsection (a); or

(C) of a family relationship with a local government officer.

Form provided by Texas Ethics Commission www.ethics.state.tx.us Revised 11/30/2015

EXHIBIT D – FEDERALLY REQUIRED CONTRACT CLAUSES

1. **FLY AMERICA**
   - **a.** The Respondent/Contractor agrees to comply with 49 U.S.C. 40118 (the "Fly America" Act) in accordance with the General Services Administration's regulations at 41 CFR Part 301-10, which provide that recipients and subrecipients of Federal funds and their Respondents/Contractors are required to use U.S. Flag air carriers for U.S Government-financed international air travel and transportation of their personal effects or property, to the extent such service is available, unless travel by foreign air carrier is a matter of necessity, as defined by the Fly America Act. The Respondent/Contractor shall submit, if a foreign air carrier was used, an appropriate certification or memorandum adequately explaining why service by a U.S. flag air carrier was not available or why it was necessary to use a foreign air carrier and shall, in any event, provide a certificate of compliance with the Fly America requirements.
   - **b.** The Respondent/Contractor also agrees to include any applicable requirements in each subcontract involving international air transportation financed in whole or in part with Federal assistance provided by FTA.
2. **BUY AMERICA** – Does not apply to this contract.
3. **CHARTER BUS and SCHOOL BUS REQUIREMENTS**
   - **a.** Charter Service Operations – Does not apply to this contract.
   - **b.** School Bus Operations – Does not apply to this contract.
4. **CARGO PREFERENCE REQUIREMENTS** – Does not apply to this contract.
5. **SEISMIC SAFETY REQUIREMENTS** – Does not apply to this contract.
6. **ENERGY CONSERVATION**
   - **a.** As authorized by the State of Texas, The Texas State Energy Conservation Office (SECO) has adopted the most recent edition of the International Energy Conservation Code (IECC) without amendment for new buildings or additions only. The Respondent/Contractor shall design the facility in accordance with 2015 IECC.
   - **b.** The Respondent/Contractor also agrees to include any applicable requirements in each subcontract involving construction of commercial buildings financed in whole or in part with Federal assistance provided by FTA.
7. **CLEAN WATER**
   - **a.** The Respondent/Contractor agrees to comply with all applicable standards, orders or regulations issued pursuant to the Federal Water Pollution Control Act, as amended, 33 U.S.C. 1251 *et seq.* The Respondent/Contractor agrees to report each violation to the GCTD and understands and agrees that the GCTD will, in turn, report each violation as required to assure notification to FTA and the appropriate EPA Regional Office.
   - **b.** The Respondent/Contractor also agrees to include these requirements in each subcontract exceeding $150,000 financed in whole or in part with Federal assistance provided by FTA.

8. BUS TESTING – Does not apply to this contract.

9. PRE-AWARD and POST DELIVERY AUDIT REQUIREMENTS – Does not apply to this contract.

10. LOBBYING

a. Respondents/Contractors who apply for an award of $100,000 or more shall file the Certification Regarding Lobbying, required by 49 CFR Part 20, New Restrictions on Lobbying, with the GCTD. Each subcontractor shall file the Certification Regarding Lobbying with the Respondent/Contractor that it will not and has not used Federal appropriated funds to pay any person or organization for influencing or attempting to influence an officer or employee of any agency, a Member of Congress, officer or employee of Congress, or an employee of a Member of Congress in connection with obtaining any Federal contract, grant or any other award covered by 31 U.S.C. 1352.

b. The Respondent/Contractor and subcontractors shall also disclose any lobbying with non-Federal funds that takes place in connection with obtaining any Federal award. Such disclosures are forwarded from subcontractors to Respondent/Contractor to the GCTD.

c. The certification regarding lobbying (See **EXHIBIT E**) is to be completed by the Respondent/Contractor and subcontractor(s) is provided herein under Certifications and Forms Section.

11. ACCESS TO RECORDS AND REPORTS

The following access to records requirements applies to this contract:

a. The GCTD is an FTA Recipient in accordance with 49 C.F.R. 18.36(i). The Respondent/Contractor agrees to provide the GCTD, the FTA Administrator, the Comptroller General of the United States or any of their authorized representatives access to any books, documents, papers, and records of the Respondent/Contractor which are directly pertinent to this contract for the purposes of making audits, examinations, excerpts, and transcriptions.

b. The Respondent/Contractor agrees to permit any of the foregoing parties to reproduce by any means whatsoever or to copy excerpts and transcriptions as reasonably needed.

c. The Respondent/Contractor agrees to maintain all books, records, accounts and reports required under this contract for a period of not less than three years after the date of termination or expiration of this contract, except in the event of litigation or settlement of claims arising from the performance of this contract, in which case Respondent/Contractor agrees to maintain same until the GCTD, the FTA Administrator, the Comptroller General, or any of their duly authorized representatives, have disposed of all such litigation, appeals, claims or exceptions related thereto. Reference 49 C.F.R. 18.39(i)(11).

d. FTA does not require the inclusion of these requirements in subcontracts.

12. FEDERAL CHANGES

a. The Respondent/Contractor shall at all times comply with all applicable FTA regulations, policies, procedures, and directives, including without limitation those listed directly or by reference in the Master Agreement between the GCTD and FTA, as they may be amended or promulgated from time to time during the term of this contract. The Respondent/Contractor's failure to so comply shall constitute a material breach of this contract.

b. The Respondent/Contractor also agrees to include any applicable requirements in each subcontract involving a federal change financed in whole or in part with Federal assistance provided by FTA.

13. BONDING REQUIREMENTS – Does not apply to this contract.

14. CLEAN AIR

a. The Respondent/Contractor agrees to comply with all applicable standards, orders or regulations issued pursuant to the Clean Air Act, as amended, 42 U.S.C. §§ 7401 *et seq.* The Respondent/Contractor agrees to report each violation to the GCTD and understands and agrees that the GCTD will, in turn, report each violation as required to assure notification to FTA and the appropriate EPA Regional Office.

b. The Respondent/Contractor also agrees to include these requirements in each subcontract exceeding $150,000 financed in whole or in part with Federal assistance provided by FTA.

15. RECYCLED PRODUCTS

a. If the Respondent/Contractor procures $10,000 or more of one of the Environmental Protection Agency designated items in a fiscal year or has procured $10,000 or more of such items in the previous fiscal year using Federal funds, the Respondent/Contractor agrees to comply with all the requirements of Section 6002 of the Resource Conservation and Recovery Act (RCRA), as amended (42 U.S.C. 6962), including but not limited to the regulatory provisions of 40 C.F.R. Part 247, and Executive Order 12873, as they apply to the procurement of the items designated in Subpart B of 40 C.F.R. Part 247, including:

i. Paper and paper products.

1. Paper and paper products, excluding building and construction paper grades.

ii. Vehicular products.

1. Lubricating oils containing re-refined oil, including engine lubricating oils, hydraulic fluids, and gear oils, excluding marine and aviation oils.

2. Tires, excluding airplane tires.

3. Reclaimed engine coolants, excluding coolants used in non-vehicular applications.

4. Rebuilt vehicular parts.

b. The Respondent/Contractor also agrees to include these requirements in each subcontract if the subcontractor procures $10,000 or more of one of the Environmental Protection Agency designated items in a fiscal year or has procured $10,000 or more of such items in the previous fiscal year using Federal funds.

16. DAVIS-BACON and COPELAND ANTI-KICKBACK ACTS – Does not apply to this contract.

17. CONTRACT WORK HOURS and SAFETY STANDARDS ACT

a. Overtime requirements - No Respondent/Contractor or subcontractor contracting for any part of the contract work which may require or involve the employment of laborers or mechanics shall require or permit any such laborer or mechanic in any workweek in which he or she is employed on such work to work in excess of forty hours in such workweek unless

such laborer or mechanic receives compensation at a rate not less than one and one-half times the basic rate of pay for all hours worked in excess of forty hours in such workweek.

b. Violation; liability for unpaid wages; liquidated damages - In the event of any violation of the clause set forth in paragraph (a) of this section the Respondent/Contractor and any subcontractor responsible therefore shall be liable for the unpaid wages. In addition, such the Respondent/Contractor and subcontractor shall be liable to the United States for liquidated damages. Such liquidated damages shall be computed with respect to each individual laborer or mechanic, including watchmen and guards, employed in violation of the clause set forth in paragraph (a) of this section, in the sum of $10 for each calendar day on which such individual was required or permitted to work in excess of the standard workweek of forty hours without payment of the overtime wages required by the clause set forth in paragraph (a) of this section.

c. Withholding for unpaid wages and liquidated damages – the GCTD shall upon its own action or upon written request of an authorized representative of the Department of Labor withhold or cause to be withheld, from any moneys payable on account of work performed by the Respondent/Contractor or subcontractor under any such contract or any other Federal contract with the same prime Respondent/Contractor, or any other federally-assisted contract subject to the Contract Work Hours and Safety Standards Act, which is held by the same prime Respondent/Contractor, such sums as may be determined to be necessary to satisfy any liabilities of such Respondent/Contractor or subcontractor for unpaid wages and liquidated damages as provided in the clause set forth in paragraph (b) of this section.

d. The Respondent/Contractor or subcontractor shall insert in any subcontracts the clauses set forth in paragraphs (a) through (d) of this section and also a clause requiring the subcontractors to include these clauses in any lower tier subcontracts. The Respondent/Contractor shall be responsible for compliance by any subcontractor or lower tier subcontractor with the clauses set forth in paragraphs (a) through (d) of this section.

18. RESERVED

19. NO FEDERAL GOVERNMENT OBLIGATION TO THIRD PARTIES

a. The GCTD and the Respondent/Contractor acknowledge and agree that, notwithstanding any concurrence by the Federal Government in or approval of the solicitation or award of the underlying contract, absent the express written consent by the Federal Government, the Federal Government is not a party to this contract and shall not be subject to any obligations or liabilities to the GCTD, the Respondent/Contractor, or any other party (whether or not a party to that contract) pertaining to any matter resulting from the underlying contract.

b. The Respondent/Contractor agrees to include the above clause in each subcontract financed in whole or in part with Federal assistance provided by FTA. It is further agreed that the clause shall not be modified, except to identify the subcontractor who will be subject to its provisions.

20. PROGRAM FRAUD and FALSE OR FRAUDULENT STATEMENTS AND RELATED ACTS

a. The Respondent/Contractor acknowledges that the provisions of the Program Fraud Civil Remedies Act of 1986, as amended, 31 U.S.C. § 3801 *et seq.* and U.S. DOT regulations, "Program Fraud Civil Remedies," 49 C.F.R. Part 31, apply to its actions pertaining to this Project. Upon execution of the underlying contract, the Respondent/Contractor certifies or

affirms the truthfulness and accuracy of any statement it has made, it makes, it may make, or causes to be made, pertaining to the underlying contract or the FTA assisted project for which this contract work is being performed. In addition to other penalties that may be applicable, the Respondent/Contractor further acknowledges that if it makes, or causes to be made, a false, fictitious, or fraudulent claim, statement, submission, or certification, the Federal Government reserves the right to impose the penalties of the Program Fraud Civil Remedies Act of 1986 on the Respondent/Contractor to the extent the Federal Government deems appropriate.

b. The Respondent/Contractor also acknowledges that if it makes, or causes to be made, a false, fictitious, or fraudulent claim, statement, submission, or certification to the Federal Government under a contract connected with a project that is financed in whole or in part with Federal assistance originally awarded by FTA under the authority of 49 U.S.C. § 5307, the Government reserves the right to impose the penalties of 18 U.S.C. § 1001 and 49 U.S.C. § 5307(n)(1) on the Respondent/Contractor, to the extent the Federal Government deems appropriate.

c. The Respondent/Contractor agrees to include the above two clauses in each subcontract financed in whole or in part with Federal assistance provided by FTA. It is further agreed that the clauses shall not be modified, except to identify the subcontractor who will be subject to the provisions.

21. TERMINATION

The contract may be terminated under the following conditions:

a. Termination for Convenience. The GCTD may terminate this contract, in whole or in part, at any time by written notice to the Respondent/Contractor when it is in the GCTD's best interest. The Respondent/Contractor shall be paid its costs, including contract close-out costs, and profit on work performed up to the time of termination. The Respondent/Contractor shall promptly submit its termination claim to the GCTD to be paid to the Respondent/Contractor. If the Respondent/Contractor has any property in its possession belonging to GCTD, the Respondent/Contractor will account for the same, and dispose of it in the manner GCTD directs.

b. Termination for Default [Breach or Cause]. If the Respondent/Contractor does not deliver supplies in accordance with the contract delivery schedule, or, if the contract is for services, the Respondent/Contractor fails to perform in the manner called for in the contract, or if the Respondent/Contractor fails to comply with any other provisions of the contract, the GCTD may terminate this contract for default. Termination shall be affected by serving a notice of termination on the Respondent/Contractor setting forth the manner in which the Respondent/Contractor is in default. The Respondent/Contractor will only be paid the contract price for supplies delivered and accepted, or services performed in accordance with the manner of performance set forth in the contract.

If it is later determined by the GCTD that the Respondent/Contractor had an excusable reason for not performing, such as a strike, fire, or flood, events which are not the fault of or are beyond the control of the Respondent/Contractor, the GCTD, after setting up a new delivery of performance schedule, may allow the Respondent/Contractor to continue work, or treat the termination as a termination for convenience.

c. Opportunity to Cure. The GCTD in its sole discretion may, in the case of a termination for breach or default, allow the Respondent/Contractor thirty (30) days in which to cure the defect. In such case, the notice of termination will state the time period in which cure is permitted and other appropriate conditions.

If Respondent/Contractor fails to remedy to the GCTD's satisfaction the breach or default of any of the terms, covenants, or conditions of this Contract within ten (10) days after receipt by Respondent/Contractor of written notice from the GCTD setting forth the nature of said breach or default, the GCTD shall have the right to terminate the Contract without any further obligation to Respondent/Contractor. Any such termination for default shall not in any way operate to preclude the GCTD from also pursuing all available remedies against Respondent/Contractor and its sureties for said breach or default.

d. Waiver of Remedies for any Breach. In the event that the GCTD elects to waive its remedies for any breach by the Respondent/Contractor of any covenant, term or condition of this Contract, such waiver by the GCTD shall not limit the GCTD's remedies for any succeeding breach of that or of any other term, covenant, or condition of this Contract.

e. Termination for Convenience. The GCTD, by written notice, may terminate this contract, in whole or in part, when it is in the Government's interest. If this contract is terminated, the GCTD shall be liable only for payment under the payment provisions of this contract for services rendered before the effective date of termination.

f. The Respondent/Contractor also agrees to include these requirements in each subcontract exceeding $10,000 financed in whole or in part with Federal assistance provided by FTA.

22. GOVERNMENT-WIDE DEBARMENT AND SUSPENSION

a. This contract is a covered transaction for purposes of 49 C.F.R. Part 29. As such, the Respondent/Contractor is required to verify that none of the Respondent/Contractor, its principals, as defined at 49 C.F.R. 29.995, or affiliates, as defined at 49 C.F.R. 29.905, are excluded or disqualified as defined at 49 C.F.R. 29.940 and 29.945.

b. The Respondent/Contractor is required to comply with 49 C.F.R. 29, Subpart C and must include the requirement to comply with 49 C.F.R. 29, Subpart C in any lower tier covered transaction it enters into.

c. The certification (See **EXHIBIT E**) is a material representation of fact relied upon by the GCTD. If it is later determined that the Respondent/Contractor knowingly rendered an erroneous certification, in addition to remedies available to the GCTD, the Federal Government may pursue available remedies, including but not limited to suspension and/or debarment. The Respondent/Contractor agrees to comply with the requirements of 49 C.F.R. 29, Subpart C and Executive Order 12549 while this offer is valid and throughout the period of any contract that may arise from this offer.

d. The Respondent/Contractor also agrees to include these requirements in each subcontract exceeding $25,000 financed in whole or in part with Federal assistance provided by FTA.

23. PRIVACY ACT – Does not apply to this contract.

24. CIVIL RIGHTS REQUIREMENTS

The following requirements apply to the underlying contract:

a. Nondiscrimination - In accordance with Title VI of the Civil Rights Act, as amended, 42 U.S.C. § 2000d, section 303 of the Age Discrimination Act of 1975, as amended, 42 U.S.C. § 6102, section 202 of the Americans with Disabilities Act of 1990, 42 U.S.C. § 12132, and Federal transit law at 49 U.S.C. § 5332, the Respondent/Contractor agrees that it will not discriminate against any employee or applicant for employment because of race, color, creed, national origin, sex, age, or disability. In addition, the Respondent/Contractor agrees to comply with applicable Federal implementing regulations and other implementing requirements FTA may issue.

b. Equal Employment Opportunity - The following requirements apply to the underlying contract:

i. Race, Color, Creed, National Origin, Sex - In accordance with Title VII of the Civil Rights Act, as amended, 42 U.S.C. § 2000e, and Federal transit laws at 49 U.S.C. § 5332, the Respondent/Contractor agrees to comply with all applicable equal employment opportunity requirements of U.S. Department of Labor (U.S. DOL) regulations, "Office of Federal Contract Compliance Programs, Equal Employment Opportunity, Department of Labor," 41 C.F.R. Parts 60 *et seq.,* (which implement Executive Order No. 11246, "Equal Employment Opportunity," as amended by Executive Order No. 11375, "Amending Executive Order 11246 Relating to Equal Employment Opportunity," 42 U.S.C. § 2000e note), and with any applicable Federal statutes, executive orders, regulations, and Federal policies that may in the future affect construction activities undertaken in the course of the Project. The Respondent/Contractor agrees to take affirmative action to ensure that applicants are employed, and that employees are treated during employment, without regard to their race, color, creed, national origin, sex, or age. Such action shall include, but not be limited to, the following: employment, upgrading, demotion or transfer, recruitment or recruitment advertising, layoff, or termination; rates of pay or other forms of compensation; and selection for training, including apprenticeship. In addition, the Respondent/Contractor agrees to comply with any implementing requirements FTA may issue.

ii. Age - In accordance with section 4 of the Age Discrimination in Employment Act of 1967, as amended, 29 U.S.C. § 623 and Federal transit law at 49 U.S.C. § 5332, the Respondent/Contractor agrees to refrain from discrimination against present and prospective employees for reason of age. In addition, the Respondent/Contractor agrees to comply with any implementing requirements FTA may issue.

iii. Disabilities - In accordance with section 102 of the Americans with Disabilities Act, as amended, 42 U.S.C. § 12112, the Respondent/Contractor agrees that it will comply with the requirements of U.S. Equal Employment Opportunity Commission, "Regulations to Implement the Equal Employment Provisions of the Americans with Disabilities Act," 29 C.F.R. Part 1630, pertaining to employment of persons with disabilities. In addition, the Respondent/Contractor agrees to comply with any implementing requirements FTA may issue.

c. The Respondent/Contractor also agrees to include these requirements in each subcontract financed in whole or in part with Federal assistance provided by FTA, modified only, if necessary, to identify the affected parties.

25. BREACHES AND DISPUTE RESOLUTION

The GCTD's breach and dispute resolution requirements are as follows:

a. Disputes - Disputes arising in the performance of this Contract which are not resolved by agreement of the parties shall be decided in writing by the authorized representative of the GCTD's Transportation Director. This decision shall be final and conclusive unless within ten (10) days from the date of receipt of its copy, the Respondent/Contractor mails or otherwise furnishes a written appeal to the Chief Financial Officer. In connection with any such appeal, the Respondent/Contractor shall be afforded an opportunity to be heard and to offer evidence in support of its position. The decision of the GCTD shall be binding upon the Respondent/Contractor and the Respondent/Contractor shall abide be the decision.

b. Performance During Dispute - Unless otherwise directed by the GCTD, Respondent/Contractor shall continue performance under this Contract while matters in dispute are being resolved.

c. Claims for Damages - Should either party to the Contract suffer injury or damage to person or property because of any act or omission of the party or of any of his employees, agents, or others for whose acts he is legally liable, a claim for damages therefor shall be made in writing to such other party within a reasonable time after the first observance of such injury of damage.

d. Remedies - Unless this contract provides otherwise, all claims, counterclaims, disputes, and other matters in question between the GCTD and the Respondent/Contractor arising out of or relating to this agreement or its breach will be decided by arbitration if the parties mutually agree, or in a court of competent jurisdiction within the State in which the GCTD is located.

e. Rights and Remedies - The duties and obligations imposed by the Contract Documents and the rights and remedies available thereunder shall be in addition to and not a limitation of any duties, obligations, rights, and remedies otherwise imposed or available by law. No action or failure to act by the GCTD or the Respondent/Contractor shall constitute a waiver of any right or duty afforded any of them under the Contract, nor shall any such action or failure to act constitute an approval of or acquiescence in any breach thereunder, except as may be specifically agreed in writing.

f. The Respondent/Contractor also agrees to include any applicable requirements in each subcontract financed in whole or in part with Federal assistance provided by FTA.

26. PATENT AND DISPUTE RESOLUTION – Does not apply to this contract.

27. TRANSIT EMPLOYEE PROTECTIVE AGREEMENTS – Does not apply to this contract.

28. DISADVANTAGED BUSINESS ENTERPRISES

a. Objective/Policy Statement - The GCTD has established a Disadvantaged Business Enterprise (DBE) program in accordance with regulations of the U.S. Department of Transportation (DOT), 49 CFR Part 26. The GCTD has received Federal financial assistance from the Department of Transportation, and as a condition of receiving this assistance, the GCTD has signed an assurance that it will comply with 49 CFR Part 26. The agency's overall goal for DBE

participation is 8.31%. A separate contract goal has not been established for this procurement.

b. Respondent/Contractor shall not discriminate on the basis of race, color, national origin, or sex in the performance of this contract. Respondent/Contractor shall carry out applicable requirements of 49 CFR Part 26 in the award and administration of this DOT-assisted contract. Failure by Respondent/Contractor to carry out these requirements is a material breach of this contract, which may result in the termination of this contract or such other remedy as the GCTD deems appropriate. Each subcontract Respondent/Contractor signs with a subcontractor must include the assurance in this paragraph (see 49 CFR 26.13(b)).

c. Respondent/Contractor is required to document all subcontractor participation including non-DBE subcontractors. Award of this contract is conditioned on submission of the following information in **EXHIBIT E** with the sealed bid:

- **i.** The names and addresses of subcontractors that will participate in the contract;
- **ii.** A description of the work that each subcontractor will perform;
- **iii.** Whether the subcontractor is a DBE, non-DBE, or a Small Business Enterprise (SBE);
- **iv.** The ethnic code, as described in the form;
- **v.** The gender code, as described in the form;
- **vi.** The age of the firm;
- **vii.** The annual gross receipts from the firm;
- **viii.** The dollar amount of the participation of each DBE firm participating; and
- **ix.** Written confirmation from the DBE subcontractor that it is participating in the contract as provided in the commitment made in the Respondent/Contractor Certification Form (**EXHIBIT E**).

d. The Respondent/Contractor shall not discriminate on the basis of race, color, national origin, or sex in the performance of this contract. The Respondent/Contractor shall carry out applicable requirements of 49 C.F.R. Part 26 in the award and administration of DOT-assisted contracts. Failure by the Respondent/Contractor to carry out these requirements is a material breach of this contract, which may result in the termination of this contract or such other remedy as the GCTD deems appropriate. Each subcontract the Respondent/Contractor signs with a subcontractor must include the assurance in this paragraph.

e. The Respondent/Contractor agrees to pay each subcontractor under this prime contract for satisfactory performance of its contract no later than ten (10) days from the receipt of each payment the prime contractor receives from the GCTD. The Respondent/Contractor agrees further to return retainage payments to each subcontractor within thirty (30) days after the subcontractor's work is satisfactorily completed. Any delay or postponement of payment from the timeframe stated in this paragraph may occur only for good cause, as determined by the GCTD, and following written approval of the GCTD. This clause applies to both DBE and non-DBE subcontractors and shall be included in the contract between the Respondent/Contractor and any and all subcontractors.

f. The Respondent/Contractor must promptly notify the GCTD, whenever a DBE subcontractor performing work related to this contract is terminated or fails to complete its work and must

make good faith efforts to engage another DBE subcontractor to perform at least the same amount of work. The Respondent/Contractor may not terminate any DBE subcontractor and perform that work through its own forces or those of an affiliate without prior written consent of the GCTD.

g. The Respondent/Contractor shall report DBE participation on a monthly basis on the Contractor Payment Report Form (**EXHIBIT E**).

h. For the Respondent/Contractor's convenience, a listing of potential DBE subcontractors listed in the Texas Unified Certification Program DBE Directory (https://txdot.txdotcms.com/Default.asp).

i. The GCTD encourages the Respondent/Contractor on DOT-assisted contract to make use of financial institution owned and controlled by socially and economically disadvantaged individuals. The Federal Reserve Statistical Release maintains a list of Minority-Owned Banks (http://www.federalreserve.gov/releases/mob/).

29. RESERVED

30. INCORPORATION OF FEDERAL TRANSIT ADMINISTRATION (FTA) TERMS

a. The preceding provisions include, in part, certain Standard Terms and Conditions required by DOT, whether or not expressly set forth in the preceding contract provisions. All contractual provisions required by DOT, as set forth in Best Practices Procurement and Lessons Learned Manual, Appendix A Federally Required and Other Model Contract Clauses, are hereby incorporated by reference. The following clauses apply to this Contract.

- **i.** Access to Records and Reports
- **ii.** Clean Air Act and Federal Water Pollution Control Act
- **iii.** Civil Rights Laws and Regulations
- **iv.** Disadvantaged Business Enterprise (DBE)
- **v.** Fly America
- **vi.** Government-Wide Debarment and Suspension
- **vii.** Lobbying Restrictions
- **viii.** No Government Obligation to Third Parties
- **ix.** Program Fraud and False or Fraudulent Statements and Related Acts
- **x.** Recycled Products
- **xi.** Termination
- **xii.** Violation and Breach of Contract

b. The Contractor shall not perform any act, fail to perform any act, or refuse to comply with any the Owner requests which would cause the Owner to be in violation of the FTA terms and conditions.

c. The Contractor also agrees to include any applicable requirements in each subcontract financed in whole or in part with Federal assistance provided by FTA.

31. DRUG AND ALCOHOL TESTING – Does not apply to this contract.

32. ACCESSIBILITY

a. ADA Accessibility ensures that all individuals regardless of disability are not excluded from the participation in, be denied the benefits of, or be subjected to discrimination under any program or activity receiving Federal financial assistance.

b. The Respondent/Contractor agrees to comply with 49 U.S.C. § 5301(d), which states the Federal policy that elderly individuals and individuals with disabilities have the same right as other individuals to use public transportation services and facilities, and that special efforts shall be made in planning and designing those services and facilities to implement transportation accessibility rights for elderly individuals and individuals with disabilities.

c. The Respondent/Contractor also agrees to comply with all applicable provisions of section 504 of the Rehabilitation Act of 1973, as amended, with 29 U.S.C. § 794, which prohibits discrimination on the basis of disability; with the Americans with Disabilities Act of 1990 (ADA), as amended, 42 U.S.C. §§ 12101 et seq., which requires that accessible facilities and services be made available to individuals with disabilities; and with the Architectural Barriers Act of 1968, as amended, 42 U.S.C. §§4151 et seq., which requires that buildings and public accommodations be accessible to individuals with disabilities; and with other laws and amendments thereto pertaining to access for individuals with disabilities that may be applicable.

d. In addition, the Respondent/Contractor agrees to comply with applicable implementing Federal regulations any later amendments thereto, and agrees to follow applicable Federal directives except to the extent FTA approves otherwise in writing

e. The Respondent/Contractor and all subcontractors shall adhere to any applicable ADA Accessibility requirements from the following:

i. 49 CFR Part 27 – Nondiscrimination on the Basis of Disability in Programs or Activities Receiving Federal Financial Assistance, U.S. DOT regulation

ii. 49 CFR Part 37 - Transportation Services for Individuals with Disabilities (ADA), U.S. DOT regulation

iii. 49 CFR Part 38 and 36 C.F.R. Part 1192 – Americans with Disabilities Act (ADA) Accessibility Specifications for Transportation Vehicles, Joint U.S. Architectural and Transportation Barriers Compliance Board (U.S. ATBCB)/U.S. DOT regulation

iv. 28 C.F.R. Part 35 – Nondiscrimination on the Basis of Disability in State and Local Government Services, U.S. DOJ regulation

v. 28 C.F.R. Part 36 – Nondiscrimination on the Basis of Disability by Public Accommodations and in Commercial Facilities, U.S. DOJ regulation

vi. 41 C.F.R. Subpart 101-19 – Accommodations for the Physically Handicapped, U.S. General Services Administration (U.S. GSA) regulation"

vii. 29 C.F.R. Part 1630 – Regulations to Implement the Equal Employment Provisions of the Americans with Disabilities Act, U.S. EEOC

viii. 47 C.F.R. Part 64, Subpart F – Telecommunications Relay Services and Related Customer Premises Equipment for the Hearing and Speech Disabled, U.S. Federal Communications Commission regulation

ix. 36 C.F.R. Part 1194 – Electronic and Information Technology Accessibility Standards, U.S. ATBCB regulation

x. 49 C.F.R. Part 609 – Transportation for Elderly and Handicapped Persons, FTA regulation

xi. Federal civil rights and nondiscrimination directives implementing the foregoing Federal laws and regulations, except to the extent the Federal Government determines otherwise in writing.

33. VETERAN'S PREFERENCE – Does not apply to this contract.

34. CONFORMANCE WITH NATIONAL ITS ARCHITECTURE – Please see guidance at the following link: https://ops.fhwa.dot.gov/its_arch_imp/policy_2.htm

EXHIBIT E – RESPONDENT PRE-AWARD CERTIFICATIONS

		Respondent Initials:
1.	Lobbying Certification	_____
2.	Suspension and Debarment Certification	_____
3.	Respondent/Contractor Certification	_____
4.	DBE Subcontractor Certification	_____
5.	Delinquent State Business Tax Certification	_____
6.	Certificate of Interested Parties	N/A
7.	Senate Bill 252 Certification	N/A
8.	House Bill 89 Verification	_____
9.	Contractor Payment Report Form	N/A

I HEREBY ATTEST THAT EXHIBIT D, FEDERALLY REQUIRED CONTRACT CLAUSES, AND EXHIBIT E, RESPONDENT PRE-AWARD CERTIFICATIONS, WERE READ AND MY INITIALS ABOVE INDICATE THAT EACH ITEM WAS PROPERLY PREPARED AND EXECUTED.

DATE: _____

RESPONDENT: _____

SIGNATURE: _____

PRINT NAME: _____

TITLE: _____

LOBBYING CERTIFICATION FORM

Certification for Contracts, Grants, Loans, and Cooperative Agreements (to be submitted with each bid or offer exceeding $100,000)

The Respondent/Contractor certifies that to the best of his or her knowledge and belief, that:

(1) No Federal appropriated funds have been paid or will be paid, by or on behalf of the undersigned, to any person for influencing or attempting to influence an officer or employee of an agency, a Member of Congress, an officer or employee of Congress, or an employee of a Member of Congress in connection with the awarding of any Federal contract, the making of any Federal grant, the making of any Federal loan, the entering into of any cooperative agreement, and the extension, continuation, renewal, amendment, or modification of any Federal contract, grant, loan, or cooperative agreement.

(2) If any funds other than Federal appropriated funds have been paid or will be paid to any person for making lobbying contacts to an officer or employee of any agency, a Member of Congress, an officer or employee of Congress, or an employee of a Member of Congress in connection with this Federal contract, grant, loan, or cooperative agreement, the undersigned shall complete and submit Standard Form--LLL, "Disclosure Form to Report Lobbying," in accordance with its instructions [as amended by "Government-wide Guidance for New Restrictions on Lobbying," 61 Fed. Reg. 1413 (1/19/96). Note: Language in paragraph (2) herein has been modified in accordance with Section 10 of the Lobbying Disclosure Act of 1995 (P.L. 104-65, to be codified at 2 U.S.C. 1601, *et seq*.)]

(3) The undersigned shall require that the language of this certification be included in the award documents for all sub-awards at all tiers (including subcontracts, sub-grants, and contracts under grants, loans, and cooperative agreements) and that all sub-recipients shall certify and disclose accordingly.

This certification is a material representation of fact upon which reliance was placed when this transaction was made or entered into. Submission of this certification is a prerequisite for making or entering into this transaction imposed by 31 U.S.C. § 1352 (as amended by the Lobbying Disclosure Act of 1995). Any person who fails to file the required certification shall be subject to a civil penalty of not less than $10,000 and not more than $100,000 for each such failure.

[Note: Pursuant to 31 U.S.C. § 1352(c)(1)-(2)(A), any person who makes a prohibited expenditure or fails to file or amend a required certification or disclosure form shall be subject to a civil penalty of not less than $10,000 and not more than $100,000 for each such expenditure or failure.]

The Respondent/Contractor/Subcontractor, _____, certifies or affirms the truthfulness and accuracy of each statement of its certification and disclosure, if any. In addition, the Respondent/Contractor understands and agrees that the provisions of 31 U.S.C. A 3801, *et seq., apply* to this certification and disclosure, if any.

DATE: _____

RESPONDENT: _____

SIGNATURE: _____

PRINT NAME: _____

TITLE: _____

SUSPENSION AND DEBARMENT CERTIFICATION FORM
CERTIFICATION REGARDING
DEBARMENT, SUSPENSION, AND OTHER RESPONSIBILITY MATTERS
PRIMARY COVERED TRANSACTIONS

This certification is required by the regulations implementing Executive Order 12549, Debarment and Suspension, 13 CFR Part 145. The regulations were published as Part VII of the May 26, 1988, Federal Register (pages 19160-19211).

(BEFORE COMPLETING CERTIFICATION, READ INSTRUCTIONS ON REVERSE)

The prospective primary Respondent/Contractor certifies to the best of its knowledge and belief that it and its principals:

(a) Are not presently debarred, suspended, proposed for disbarment, declared ineligible, or voluntarily excluded from covered transactions by any Federal department or agency;

(b) Have not within a three-year period preceding this application been convicted of or had a civil judgment rendered against them for commission of fraud or a criminal offense in connection with obtaining, attempting to obtain, or performing a public (Federal, State, or local) transaction or contract under a public transaction; violation of Federal or State antitrust statutes or commission of embezzlement, theft, forgery, bribery, falsification or destruction of records, making false statements, or receiving stolen property;

(c) Are not presently indicted for or otherwise criminally or civilly charged by a governmental entity (Federal, State, or local) with commission of any of the offenses enumerated in paragraph (1)(b) of this certification; and

(d) Have not within a three-year period preceding this application had one or more public transactions (Federal, State, or local) terminated for cause or default.

Where the prospective primary Respondent/Contractor is unable to certify to any of the statements in this certification, such prospective primary participant shall attach an explanation to this proposal.

DATE: _____

RESPONDENT: _____

SIGNATURE: _____

PRINT NAME: _____

TITLE: _____

INSTRUCTIONS FOR CERTIFICATION

By signing and submitting this proposal, the Respondent/Contractor is providing the certification set out below.

1. The inability of a person to provide the certification required below will not necessarily result in denial of participation in this covered transaction. The Respondent/Contractor shall submit an explanation of why it cannot provide the certification set out below. The certification or explanation will be considered in connection with the GCTD's determination whether to enter into this transaction. However, failure of the Respondent/Contractor to furnish a certification or an explanation shall disqualify such person from participation in this transaction.
2. The certification in this clause is a material representation of fact upon which reliance was placed when the GCTD determined to enter into this transaction. If it is later determined that the Respondent/Contractor knowingly rendered an erroneous certification, in addition to other remedies available to the Federal Government, the GCTD may immediately terminate this transaction for cause or default.
3. The Respondent/Contractor shall provide immediate written notice to the GCTD if at any time the Respondent/Contractor learns that its certification was erroneous when submitted or has become erroneous by reason of changed circumstances.
4. The terms "covered transaction," "debarred," "suspended," "ineligible," "lower tier covered transaction," "person," "primary covered transaction," "principal," "proposal," and "voluntarily excluded," as used in this clause, have the meanings set out in the Definitions and Coverage sections of the rules implementing Executive Order 12549. Respondent/Contractor may contact the GCTD for assistance in obtaining a copy of those regulations (13 CFR Part 145).
5. The Respondent/Contractor agrees by submitting this proposal that, should the proposed covered transaction be entered into, it shall not knowingly enter into any lower tier covered transaction with a subcontractor who is debarred, suspended, declared ineligible, or voluntarily excluded from participation in this covered transaction, unless authorized by the GCTD when entering into this transaction.
6. The Respondent/Contractor further agrees by submitting this proposal that it will include the clause titled "Certification Regarding Debarment, Suspension, Ineligibility and Voluntary Exclusion- Lower Tier Covered Transactions," provided by the GCTD when entering into this covered transaction, without modification, in all lower tier covered transactions and in all solicitations for lower tier covered transactions.
7. Nothing contained in the foregoing shall be construed to require establishment of a system of records in order to render in good faith the certification required by this clause. The knowledge and information of a Respondent/Contractor is not required to exceed that which is normally possessed by a prudent person in the ordinary course of business dealings.
8. Except for transactions authorized under paragraph 6 of these instructions, if a Respondent/Contractor in a covered transaction knowingly enters into a lower tier covered transaction with a subcontractor who is suspended, debarred, ineligible, or voluntarily excluded from participation in this transaction, in addition to other remedies available to the Federal Government, the GCTD may terminate this transaction for cause or default.
9. The Respondent/Contractor also agrees to include these requirements in each subcontract, or a lower tier covered transaction, exceeding $25,000 financed in whole or in part with Federal assistance provided by FTA.

RESPONDENT/CONTRACTOR CERTIFICATION FORM

Instructions: The Respondent/Contractor shall complete this form by listing 1) Names of all proposed subcontractors. 2) Contact information, 3) Description of work to be performed/product to be provided, 4) Status as a DBE, SBE or non-DBE, 5) Ethnic Code of firm 6) Gender of the Owner, 7) Age of the firm, 8) Annual gross receipts of the firm, 9) % or $ amount of Total Contract. Those subcontractors who are listed on this form as DBEs and SBEs must have current certification as a DBE or SBE with a participating UCP certifying agency. The DBE or SBE certification must be complete by the time the bids/proposals are submitted. Additionally, those subcontractors who are listed on this form as DBEs or SBEs must complete DBE and SBE Subcontractor Letter of Intent, agreeing to the information listed herein.

Ethnic Codes: A) Black American **B**) Hispanic American **C)** Native American **D)** Sub-continental Asian American **E)** Asian-Pacific American **F)** Non-Minority Women **G)** Other **Gender Codes: M)** Man **W)** Woman **X)** Choose Not to Answer

1) Name of Subcontractor	2) Address, Telephone # of DBE Firm (Including name of contact person)	3) Description of Work, Services Provided. Where applicable, specify "supply" or "Install" or both.	4) DBE, SBE or non-DBE	5) Ethnic Code	6) Owner Gender	7) Age of Firm	8) Annual Gross Receipts	9) % or $ amount of Total Contract

THIS SCHEDULE MUST BE COMPLETED AS INSTRUCTED ABOVE AND INCLUDE EVERY SUBCONTRACTOR PROPOSED. ADD ADDITIONAL PAGES, IF NEEDED.

The undersigned will enter into a formal agreement with DBE and/or SBE contractors for work listed in this schedule upon execution of a contract with the GCTD. The Respondent/Contractor agrees to the terms of this schedule by signing below and submitting the **DBE and SBE Contractor Letter of Intent**, as completed by the DBE or SBE subcontractor(s).

DATE: _____

RESPONDENT: _____

SIGNATURE: _____

PRINT NAME: _____

TITLE: _____

DBE AND SBE SUBCONTRACTOR LETTER OF INTENT

Note: DBE and SBE firms participating in the DBE or SBE Program must have "current" certification status with a UCP Certifying Agency by the due date established for this Request for Proposal (RFP).

1. TO: (Respondent/ Contractor): _____

2. The undersigned is either currently certified under a Unified Certification Program (UCP) as a DBE, SBE or will be at the time this RFP is due.

The undersigned is prepared to perform the following described work and/or supply the material listed in connection with the above project (where applicable specify "supply" or "install" or both)

_____

_____

_____

and at the following price $_____ and/or _____% of the total contract amount (should be the same $ or % found on Respondent/Contractor Certification).

3. The DBE or SBE subcontractor should complete this section only if the DBE or SBE is subcontracting any portion of its subcontract.

With respect to the proposed subcontract described above, the undersigned DBE anticipates that _____% of the dollar value of this subcontract will be awarded to other contractors. Any and all DBE subcontractors a DBE subcontractor uses must be listed on Form 1 and must also be DBE certified.

DATE: _____

DBE/SBE FIRM: _____

SIGNATURE: _____

PRINT NAME: _____

TITLE: _____

DATE: _____

RESPONDENT: _____

SIGNATURE: _____

PRINT NAME: _____

TITLE: _____

DELINQUENT STATE BUSINESS TAX CERTIFICATION FORM

All Respondents shall certify that Respondent is not delinquent in a tax owed the state under Chapter 171, Tax Code, pursuant to the Texas Business Corporation Act, Texas Statutes, Article 2.45.

DATE: _____

RESPONDENT: _____

SIGNATURE: _____

PRINT NAME: _____

TITLE: _____

CERTIFICATE OF INTERESTED PARTIES

For reference only, this form is filled out with the awarded Contractor online
https://www.ethics.state.tx.us/whatsnew/elf_info_form1295.htm

CERTIFICATE OF INTERESTED PARTIES — FORM 1295

Complete Nos. 1 - 4 and 6 if there are interested parties.
Complete Nos. 1, 2, 3, 5, and 6 if there are no interested parties.

OFFICE USE ONLY

1 Name of business entity filing form, and the city, state and country of the business entity's place of business.

2 Name of governmental entity or state agency that is a party to the contract for which the form is being filed.

3 Provide the identification number used by the governmental entity or state agency to track or identify the contract, and provide a description of the services, goods, or other property to be provided under the contract.

4 Name of Interested Party	City, State, Country (place of business)	Nature of Interest (check applicable)	
		Controlling	Intermediary

5 Check only if there is NO Interested Party. ☐

6 UNSWORN DECLARATION

My name is _____, and my date of birth is _____.

My address is _____, _____, _____, _____, _____.
(street) (city) (state) (zip code) (country)

I declare under penalty of perjury that the foregoing is true and correct.

Executed in _____ County, State of _____, on the _____ day of _____ 20_____.
(month) (year)

_____
Signature of authorized agent of contracting business entity
(Declarant)

ADD ADDITIONAL PAGES AS NECESSARY

Form provided by Texas Ethics Commission www.ethics.state.tx.us Revised 12/22/2017

Must file online at www.ethics.state.tx.us/File

SENATE BILL 252 CERTIFICATION

On this day, I, Stephen Holmes, the **Chairman of the Board of Directors** for the **Gulf Coast Transit District**, pursuant to Chapter 2252, Section 2252.152 of the Texas Government Code, certify that I did review the website list prepared, maintained, and made available to the GCTD by the Comptroller of the State of Texas of companies known to have contracts with or provide supplies or services to Iran, Sudan, or any foreign terrorist organization. I have ascertained that the below-named company is not contained on said list of companies that do business with Iran, Sudan, or any Foreign Terrorist Organization.

RESPONDENT FILL OUT THE BELOW SECTION:

_____
Company Name

_____
RFP or Vendor number

CERTIFICATION CHECK PERFORMED BY:

_____
(signature)

_____
Chairman, Board of Directors, GCTD

_____
Date

HOUSE BILL 89 VERIFICATION

I, _____(Person name), the undersigned representative of (Company or Business Name) _____(hereinafter referred to as Company) **being an adult over the age of eighteen (18) years of age, after being duly sworn by the undersigned notary, do hereby depose and verify under oath that the company named-above, under the provisions of Subtitle F, Title 10, Government Code Chapter 2270:**

a) Does not boycott Israel currently; and
b) Will not boycott Israel during the term of the contract the above-named Company, business or individual with the GCTD.

Pursuant to Section 2270.001, Texas Government Code:

1. "Boycott Israel" means refusing to deal with, terminating business activities with, or otherwise taking any action that is intended to penalize, inflict economic harm on, or limit commercial relations specifically with Israel, or with a person or entity doing business in Israel or in an Israeli-controlled territory, but does not include an action made for ordinary business purposes; and
2. "Company" means a for-profit sole proprietorship, organization, association, corporation, partnership, joint venture, limited partnership, limited liability partnership, or any limited liability company, including a wholly owned subsidiary, majority-owned subsidiary, parent company or affiliate of those entities or business associations that exist to make a profit.

_____ _____

DATE SIGNATURE OF COMPANY REPRESENTATIVE

STATE OF _____ § COUNTY OF_____

On this day, BEFORE ME**,** the undersigned, personally appeared _____, the _____of Company, and personally known to me or proved to me on the basis of satisfactory evidence to be the individual whose name is subscribed to the within instrument and acknowledged to me that he/she executed the same in his/her capacity, and that by his/her signature on the instrument, the individual executed the instrument for purposes and consideration therein expressed.

GIVEN UNDER MY HAND AND SEAL OF OFFICE this _____day of_____, 2021.

_____

[SEAL] NOTARY PUBLIC in and for the State of Texas

CONTRACTOR PAYMENT REPORT FORM

Instructions: Contractors are required to complete and submit this report, as specified in the contract or as requested, until final payment of the contract has been made. Failure to comply with the DBE provisions may result in contract termination, or the suspension or debarment of the contractor from doing business with the Owner in the future in accordance with the procedures set forth in the DBE Program. This report must be submitted with each invoice. Instructions for completing this report can be found on the following sheet.

1 Contract Number, if applicable	2 Invoice Number	3 Reporting Period		4 Contractor's Business Name	5 Contact Person	6 Address
		From:	To:			

7 Telephone Number	8 Date of Contract Award	9 Schedule Date of Completion	10 Original Contract Amount	11 Current Contract Modifications	12 Total Amount Received to Date	13 Total Amount Owed

14 Committed DBE %	15 Actual DBE Participation to date	16 Actual DBE % to date

17 Name of DBE Subcontractor	18 Description of Work	19 Amount of payments made during current invoice period	20 Date of payments made during current invoice period	21 Subcontract Dollars	22 Amount paid to date	23 Percent paid to date	24 Amount of this invoice allocated to DBE Subcontractor

(Add rows to the table, as needed, to complete this section)

By completing this form, the Contractor acknowledges the Owner's prompt payment policy, which requires the Contractor to pay all subcontractors within 30 days of receiving payment from the Owner.

Signature	Date Signed	Name and Title of Individual Completing Report

EXHIBIT F – TXDOT PTN-130

Texas Department of Transportation

Consolidated Certification Form

Form PTN-130
(Rev. 6/21)
Page 1 of 14

This form is to assist subrecipients with managing the federal and state clauses related to the procurement they're interested in completing. This document complies with all pertinent federal and state regulations for each procurement type.

To begin, select the procurement's funding source. If TxDOT is the pass-through entity (Direct Recipient), both Federal and State must be checked.

☒ Federal and State ☐ State Only

Federal Clauses – Procurement Types Summary:

All FTA-Assisted Third-Party Contracts and Subcontracts

1. No Federal Government Obligations to Third Parties
2. Access to Third Party Contract Records
3. Changes to Federal Requirements
4. Civil Rights (EEO, Title VI & ADA)
5. Incorporation of FTA Terms
6. Energy Conservation
7. Veterans Preference
8. False or Fraudulent Statements or Claims
9. Disadvantaged Business Enterprises (DBE)
10. Fly America
11. ADA Access
12. Special Notification Requirements for States

Award Exceeding $10,000

13. Terminating the Contract

Award Exceeding $25,000

14. Debarment and Suspension

☐ **Award Exceeding $50,000**

15. Contracting with the Enemy

☐ **Award Exceeding $100,000**

16. Resolution of Disputes, Breaches, or Other Litigation
17. Lobbying Restrictions

☒ **Award Exceeding $150,000**

18. Environmental Protection (Clean Air and Water Pollution Control)

All FTA-ASSISTED THIRD-PARTY CONTRACTS AND SUBCONTRACTS

1. No Federal Government Commitment or Liability to Third Parties

Except as the Federal Government expressly consents in writing, the Recipient agrees that:

A. The Federal Government does not and shall not have any commitment or liability related to the Underlying Agreement, to any Third-Party Participant at any tier, or to any other person or entity that is not a party (FTA or the Recipient) to the Underlying Agreement; and

B. Notwithstanding that the Federal Government may have concurred in or approved any Solicitation or Third-Party Agreement at any tier that may affect the Underlying Agreement, the Federal Government does not and shall not have any commitment or liability to any Third-Party Participant or other entity or person that is not a party (FTA or the Recipient) to the Underlying Agreement.

2. Access to Third-Party Contract Records

The Recipient agrees to require, and assures that each of its Subrecipients will require, its Third-Party Contractors at each tier to provide:

A. The U.S. Secretary of Transportation and the Comptroller General of the United States, the state, or their duly authorized representatives, access to all Third-Party Contract records (at any tier) as required under 49 U.S.C. § 5325(g); and

B. Sufficient access to all Third-Party Contract records (at any tier) as needed for compliance with applicable federal laws, regulations, and requirements or to assure.

3. Changes to Federal Requirements

The Recipient agrees to include notice in each Third-Party Agreement that:

A. Federal requirements that apply to the Recipient or the Award, the accompanying Underlying Agreement, and any Amendments thereto may change due to changes in federal law, regulation, other requirements, or guidance, or changes in the Recipient's Underlying Agreement including any information incorporated by reference and made part of that Underlying Agreement; and

B. Applicable changes to those federal requirements will apply to each Third-Party Agreement and parties thereto at any tier.

4. Civil Rights

The following Federal Civil Rights laws and regulations apply to all contracts.

A. Federal Equal Employment Opportunity (EEO) Requirements. These include, but are not limited to: a. Nondiscrimination in Federal Public Transportation Programs. 49 U.S.C. § 5332, covering projects, programs, and activities financed under 49 U.S.C. Chapter 53, prohibits discrimination on the basis of race, color, religion, national origin, sex (including sexual orientation and gender identity), disability, or age, and prohibits discrimination in employment or business opportunity. b. Prohibition against Employment Discrimination. Title VII of the Civil Rights Act of 1964, as amended, 42 U.S.C. § 2000e, and Executive Order No. 11246, "Equal Employment Opportunity," September 24, 1965, as amended, prohibit discrimination in employment on the basis of race, color, religion, sex, or national origin.

B. Nondiscrimination on the Basis of Sex. Title IX of the Education Amendments of 1972, as amended, 20 U.S.C. § 1681 et seq. and implementing Federal regulations, "Nondiscrimination on the Basis of Sex in Education Programs or Activities Receiving Federal Financial Assistance," 49 C.F.R. part 25 prohibit discrimination on the basis of sex.

C. Nondiscrimination on the Basis of Age. The "Age Discrimination Act of 1975," as amended, 42 U.S.C. § 6101 et seq., and Department of Health and Human Services implementing regulations, "Nondiscrimination on the Basis of Age in Programs or Activities Receiving Federal Financial Assistance," 45 C.F.R. part 90, prohibit discrimination by participants in federally assisted programs against individuals on the basis of age. The Age Discrimination in Employment Act (ADEA), 29 U.S.C. § 621 et seq., and Equal Employment Opportunity Commission (EEOC) implementing regulations, "Age Discrimination in Employment Act," 29 C.F.R. part 1625, also prohibit employment discrimination against individuals age 40 and over on the basis of age.

D. Federal Protections for Individuals with Disabilities. The Americans with Disabilities Act of 1990, as amended (ADA), 42 U.S.C. § 12101 et seq., prohibits discrimination against qualified individuals with disabilities in programs, activities, and services, and imposes specific requirements on public and private entities. Third party contractors must comply with their responsibilities under Titles I, II, III, IV, and V of the ADA in employment, public services, public accommodations, telecommunications, and other provisions, many of which are subject to regulations issued by other Federal agencies.

E. Equal Opportunity: The Agency is an Equal Opportunity Employer. As such, the Agency agrees to comply with all applicable Federal civil rights laws and implementing regulations. Apart from inconsistent requirements imposed by Federal laws or regulations, the Agency agrees to comply with the requirements of 49 U.S.C. § 5323(h) (3) by not using any Federal assistance awarded by FTA to support procurements using exclusionary or discriminatory specifications. Under this Contract, the Contractor shall at all times comply with the following requirements and shall include these requirements in each subcontract entered into as part thereof.

I. Nondiscrimination. In accordance with Federal transit law at 49 U.S.C. § 5332, the Contractor agrees that it will not discriminate against any employee or applicant for employment because of race, color, religion, national origin, sex, disability, or age. In addition, the Contractor agrees to comply with applicable Federal implementing regulations and other implementing requirements FTA may issue.

II. Race, Color, Religion, National Origin, Sex. In accordance with Title VII of the Civil Rights Act, as amended, 42 U.S.C. § 2000e et seq., and Federal transit laws at 49 U.S.C. § 5332, the Contractor agrees to comply with all applicable equal employment opportunity requirements of U.S. Department of Labor (U.S. DOL) regulations, "Office of Federal Contract Compliance Programs, Equal Employment Opportunity, Department of Labor," 41 C.F.R. chapter 60, and Executive Order No. 11246, "Equal Employment Opportunity in Federal Employment," September 24, 1965, 42 U.S.C. § 2000e note, as amended by any later Executive Order that amends or supersedes it, referenced in 42 U.S.C. § 2000e note. The Contractor agrees to take affirmative action to ensure that applicants are employed, and that employees are treated during employment, without regard to their race, color, religion, national origin, or sex (including sexual orientation and gender identity). Such action shall include, but not be limited to, the following: employment, promotion, demotion or transfer, recruitment or recruitment advertising, layoff or termination; rates of pay or other forms of compensation; and selection for training, including apprenticeship. In addition, the Contractor agrees to comply with any implementing requirements FTA may issue.

III. Age. In accordance with the Age Discrimination in Employment Act, 29 U.S.C. §§ 621-634, U.S. Equal Employment Opportunity Commission (U.S. EEOC) regulations, "Age Discrimination in Employment Act," 29 C.F.R. part 1625, the Age Discrimination Act of 1975, as amended, 42 U.S.C. § 6101 et seq., U.S. Health and Human Services regulations, "Nondiscrimination on the Basis of Age in Programs or Activities Receiving Federal Financial Assistance," 45 C.F.R. part 90, and Federal transit law at 49 U.S.C. § 5332, the Contractor agrees to refrain from discrimination against present and prospective employees for reason of age. In addition, the Contractor agrees to comply with any Implementing requirements FTA may issue.

IV. Disabilities. In accordance with section 504 of the Rehabilitation Act of 1973, as amended, 29 U.S.C. § 794, the Americans with Disabilities Act of 1990, as amended, 42 U.S.C. § 12101 et seq., the Architectural Barriers Act of 1968, as amended, 42 U.S.C. § 4151 et seq., and Federal transit law at 49 U.S.C. §5332, the Contractor agrees that it will not discriminate against individuals on the basis of disability. In addition, the Contractor agrees to comply with any implementing requirements FTA may issue.

V. Promoting Free Speech and Religious Liberty. The Contractor shall ensure that Federal funding is expended in full accordance with the U.S. Constitution, Federal Law, and statutory and public policy requirements: including, but not limited to, those protecting free speech, religious liberty, public welfare, the environment, and prohibiting discrimination.

5. Incorporation of Federal Transit Administration (FTA) Terms

The provisions within include, in part, certain Standard Terms and Conditions required by DOT, whether or not expressly set forth in the preceding contract provisions. All contractual provisions required by DOT, as set forth in the current FTA Circular 4220 are hereby incorporated by reference. Anything to the contrary herein notwithstanding, all FTA mandated terms shall be deemed to control in the event of a conflict with other provisions contained in this Contract. The Contractor shall not perform any act, fail to perform any act, or refuse to comply with any request which would cause a violation of the FTA terms and conditions.

6. Energy Conservation

The Recipient agrees to, and assures that its Subrecipients will, comply with the mandatory energy standards and policies of its state energy conservation plans under the Energy Policy and Conservation Act, as amended, 42 U.S.C. § 6321 et seq., and perform

an energy assessment for any building constructed, reconstructed, or modified with federal assistance required under FTA regulations, "Requirements for Energy Assessments," 49 C.F.R. part 622, subpart C.

7. Veterans Preference

As provided in 49 U.S.C. § 5325(k), to the extent practicable, the Recipient agrees and assures that each of its Subrecipients:

A. Will give a hiring preference to veterans, as defined in 5 U.S.C. § 2108, who have the skills and abilities required to perform construction work required under a Third-Party Contract in connection with a Capital Project supported with federal assistance appropriated or made available for 49 U.S.C. chapter 53; and

B. Will not require an employer to give a preference to any veteran over any equally qualified applicant who is a member of any racial or ethnic minority, female, an individual with a disability, or a former employee.

8. False or Fraudulent Statements or Claims

A. Civil Fraud. The Recipient acknowledges and agrees that:

I. Federal laws, regulations, and requirements apply to itself and its Underlying Agreement, including the Program Fraud Civil Remedies Act of 1986, as amended, 31 U.S.C. § 3801 et seq., and U.S. DOT regulations, "Program Fraud Civil Remedies," 49 C.F.R. part 31.

II. By executing the Underlying Agreement, the Recipient certifies and affirms to the Federal Government the truthfulness and accuracy of any claim, statement, submission, certification, assurance, affirmation, or representation that the Recipient provides to the Federal Government.

III. The Federal Government may impose the penalties of the Program Fraud Civil Remedies Act of 1986, as amended, and other applicable penalties if the Recipient presents, submits, or makes available any false, fictitious, or fraudulent information.

B. Criminal Fraud. The Recipient acknowledges that 49 U.S.C. § 5323(l)(1) authorizes the Federal Government to impose the penalties under 18 U.S.C. § 1001 if the Recipient provides a false, fictitious, or fraudulent claim, statement, submission, certification, assurance, or representation in connection with a federal public transportation program under 49 U.S.C. chapter 53 or any other applicable federal law.

9. Disadvantaged Business Enterprises

The recipient must include assurances that third party contractors will comply with the DBE program requirements of 49 C.F.R. part 26, when applicable. The following contract clause is required in all DOT-assisted prime and subcontracts:

The contractor, subrecipient or subcontractor shall not discriminate on the basis of race, color, national origin, or sex in the performance of this contract. The contractor shall carry out applicable requirements of 49 C.F.R. part 26 in the award and administration of DOT-assisted contracts. Failure by the contractor to carry out these requirements is a material breach of this contract, which may result in the termination of this contract or such other remedy as the recipient deems appropriate, which may include, but is not limited to:

A. Withholding monthly progress payments;

B. Assessing sanctions;

C. Liquidated damages; and/or

D. Disqualifying the contractor from future bidding as non-responsible. 49 C.F.R. §26.13(b).

Further, recipients must establish a contract clause to require prime contractors to pay subcontractors for satisfactory performance of their contracts no later than 30 days from receipt of each payment the recipient makes to the prime contractor. 49 C.F.R. § 26.29(a). Finally, for contracts with defined DBE contract goals, each FTA recipient must include in each prime contract a provision stating that the contractor shall utilize the specific DBEs listed unless the contractor obtains the recipient's written

consent; and that, unless the recipient's consent is provided, the contractor shall not be entitled to any payment for work or material unless it is performed or supplied by the listed DBE. 49 C.F.R. § 26.53(f) (1).

10. Fly America

The recipient agrees to comply with the air transportation requirements of Section 5 of the International Air Transportation Fair Competitive Practices Act of 1974, as amended, 49 U.S.C. § 40118, and U.S. General Services Administration (U.S. GSA) regulations, "Use of United States Flag Air Carriers," 41 C.F.R. §§ 301-10.131 – 301-10.143.

11. ADA Access

The Recipient agrees to comply with the following federal prohibitions against discrimination based on disability:

A. Federal laws, including:

I. Section 504 of the Rehabilitation Act of 1973, as amended, 29 U.S.C. § 794, which prohibits discrimination based on disability in the administration of federally assisted Programs, Projects, or activities;

II. The Americans with Disabilities Act of 1990 (ADA), as amended, 42 U.S.C. § 12101 et seq., which requires that accessible facilities and services be made available to individuals with disabilities:

a. For FTA Recipients generally, Titles I, II, and III of the ADA apply; but

b. For Indian Tribes, Titles II and III of the ADA apply, but Title I of the ADA does not apply because it exempts Indian Tribes from the definition of "employer;"

III. The Architectural Barriers Act of 1968, as amended, 42 U.S.C. § 4151 et seq., which requires that buildings and public accommodations be accessible to individuals with disabilities;

IV. Federal transit law, specifically 49 U.S.C. § 5332, which now includes disability as a prohibited basis for discrimination; and

V. Other applicable federal laws, regulations, and requirements pertaining to access for seniors or individuals with disabilities.

B. Federal regulations and guidance, including:

I. U.S. DOT regulations, "Transportation Services for Individuals with Disabilities (ADA)," 49 C.F.R. part 37;

II. U.S. DOT regulations, "Nondiscrimination on the Basis of Disability in Programs and Activities Receiving or Benefiting from Federal Financial Assistance," 49 C.F.R. part 27;

III. Joint U.S. Architectural and Transportation Barriers Compliance Board (U.S. ATBCB) and U.S. DOT regulations, "Americans With Disabilities (ADA) Accessibility Specifications for Transportation Vehicles," 36 C.F.R. part 1192 and 49 C.F.R. part 38;

IV. U.S. DOT regulations, "Transportation for Individuals with Disabilities: Passenger Vessels," 49 C.F.R. part 39;

V. U.S. DOJ regulations, "Nondiscrimination on the Basis of Disability in State and Local Government Services," 28 C.F.R. part 35;

VI. U.S. DOJ regulations, "Nondiscrimination on the Basis of Disability by Public Accommodations and in Commercial Facilities," 28 C.F.R. part 36;

VII. U.S. EEOC, "Regulations to Implement the Equal Employment Provisions of the Americans with Disabilities Act," 29 C.F.R. part 1630;

VIII. U.S. Federal Communications Commission regulations, "Telecommunications Relay Services and Related Customer Premises Equipment for Persons with Disabilities," 47 C.F.R. part 64, subpart F;

IX. U.S. ATBCB regulations, "Electronic and Information Technology Accessibility Standards," 36 C.F.R. part 1194;

X. FTA regulations, "Transportation for Elderly and Handicapped Persons," 49 C.F.R. part 609;

XI. FTA Circular 4710.1, "Americans with Disabilities Act: Guidance;" and

XII. Other applicable federal civil rights and nondiscrimination regulations and guidance.

12. Special Notification Requirements for States

A. Types of Information. To the extent required under federal law, the State, as the Recipient, agrees to provide the following information about federal assistance awarded for its State Program, Project, or related activities:

I. The Identification of FTA as the federal agency providing the federal assistance for a State Program or Project;

II. The Catalog of Federal Domestic Assistance Number of the program from which the federal assistance for a State Program or Project is authorized; and

III. The amount of federal assistance FTA has provided for a State Program or Project.

B. Documents. The State agrees to provide the information required under this provision in the following documents: (1) applications for federal assistance, (2) requests for proposals or solicitations, (3) forms, (4) notifications, (5) press releases, and (6) other publications.

Awards Exceeding $10,000

13. Termination

All contracts in excess of $10,000 must address termination for cause by the non-federal entity including the manner by which it will be effected and the basis for settlement.

Awards Exceeding $25,000

14. Debarment and Suspension

The Recipient agrees to the following:

A. It will comply with the following requirements of 2 C.F.R. part 180, subpart C, as adopted and supplemented by U.S. DOT regulations at 2 C.F.R. part 1200.

B. It will not enter into any "covered transaction" (as that phrase is defined at 2 C.F.R. §§ 180.220 and 1200.220) with any Third-Party Participant that is, or whose principal is, suspended, debarred, or otherwise excluded from participating in covered transactions, except as authorized by—

I. U.S. DOT regulations, "Nonprocurement Suspension and Debarment," 2 C.F.R. part 1200;

II. U.S. OMB regulatory guidance, "Guidelines to Agencies on Governmentwide Debarment and Suspension (Nonprocurement)," 2 C.F.R. part 180; and

III. Other applicable federal laws, regulations, or requirements regarding participation with debarred or suspended Recipients or Third-Party Participants.

C. It will review the U.S. GSA "System for Award Management – Lists of Parties Excluded from Federal Procurement and Nonprocurement Programs," if required by U.S. DOT regulations, 2 C.F.R. part 1200.

D. It will ensure that its Third-Party Agreements contain provisions necessary to flow down these suspension and debarment provisions to all lower tier covered transactions.

E. If the Recipient suspends, debars, or takes any similar action against a Third-Party Participant or individual, the Recipient will provide immediate written notice to the:

I. FTA Regional Counsel for the Region in which the Recipient is located or implements the Underlying Agreement;

II. FTA Headquarters Manager that administers the Grant or Cooperative Agreement; or

III. FTA Chief Counsel.

Awards Exceeding $50,000

15. Never Contract with the Enemy

The Recipient agrees to the regulations implementing Never Contract with the Enemy in 2 CFR part 183. The regulations in 2 CFR part 183 affect covered contracts, grants and cooperative agreements that are expected to exceed $50,000 within the period of performance, are performed outside the United States and its territories, and are in support of a contingency operation in which members of the Armed Forces are actively engaged in hostilities.

Awards Exceeding $100,000

16. Resolution of Disputes, Breaches, or Other Litigation

A. FTA Interest

FTA has a vested interest in the settlement of any violation of federal law, regulation, or requirement, or any disagreement involving the Award, the accompanying Underlying Agreement, and any Amendments thereto including, but not limited to, a default, breach, major dispute, or litigation, and FTA reserves the right to concur in any settlement or compromise.

B. Notification to FTA; Flow Down Requirement

If a current or prospective legal matter that may affect the Federal Government emerges, the Recipient must promptly notify the FTA Chief Counsel and FTA Regional Counsel for the Region in which the Recipient is located. The Recipient must include a similar notification requirement in its Third-Party Agreements and must require each Third-Party Participant to include an equivalent provision in its sub-agreements at every tier, for any agreement that is a "covered transaction" according to 2 C.F.R. §§ 180.220 and 1200.220.

I. The types of legal matters that require notification include, but are not limited to, a major dispute, breach, default, litigation, or naming the Federal Government as a party to litigation or a legal disagreement in any forum for any reason.

II. Matters that may affect the Federal Government include, but are not limited to, the Federal Government's interests in the Award, the accompanying Underlying Agreement, and any Amendments thereto, or the Federal Government's administration or enforcement of federal laws, regulations, and requirements.

III. Additional Notice to U.S. DOT Inspector General. The Recipient must promptly notify the U.S. DOT Inspector General in addition to the FTA Chief Counsel or Regional Counsel for the Region in which the Recipient is located, if the Recipient has knowledge of potential fraud, waste, or abuse occurring on a Project receiving assistance from FTA. The notification provision applies if a person has or may have submitted a false claim under the False Claims Act, 31 U.S.C. § 3729 et seq., or has or may have committed a criminal or civil violation of law pertaining to such matters as fraud, conflict of interest, bid rigging, misappropriation or embezzlement, bribery, gratuity, or similar misconduct involving federal assistance. This responsibility occurs whether the Project is subject to this Agreement or another agreement between the Recipient and FTA, or an agreement involving a principal, officer, employee, agent, or Third-Party Participant of the Recipient. It also applies to subcontractors at any tier. Knowledge, as used in this paragraph, includes, but is not limited to, knowledge of a criminal or civil investigation by a Federal, state, or local law enforcement or other investigative agency, a criminal indictment or civil complaint, or probable cause that could support a criminal indictment, or any other credible information in the possession of the Recipient. In this paragraph, "promptly" means to refer information without delay and without change. This notification provision applies to all divisions of the Recipient, including divisions tasked with law enforcement or investigatory functions.

C. Federal Interest in Recovery

The Federal Government retains the right to a proportionate share of any proceeds recovered from any third party, based on the percentage of the federal share for the Underlying Agreement. Notwithstanding the preceding sentence, the Recipient may return all liquidated damages it receives to its Award Budget for its Underlying Agreement rather than return the federal share of those liquidated damages to the Federal Government, provided that the Recipient receives FTA's prior written concurrence.

D. Enforcement

The Recipient must pursue its legal rights and remedies available under any Third-Party Agreement or any federal, state, or local law or regulation.

E. Agency Process

*Vendors may view the dispute resolution process here:

17. Lobbying Restrictions.

The Recipient agrees that neither it nor any Third-Party Participant will use federal assistance to influence any officer or employee of a federal agency, member of Congress or an employee of a member of Congress, or officer or employee of Congress on matters that involve the Underlying Agreement, including any extension or modification, according to the following:

A. Laws, Regulations, Requirements, and Guidance. This includes:

I. The Byrd Anti-Lobbying Amendment, 31 U.S.C. § 1352, as amended;

II. U.S. DOT regulations, "New Restrictions on Lobbying," 49 C.F.R. part 20, to the extent consistent with 31 U.S.C. § 1352, as amended; and

III. Other applicable federal laws, regulations, requirements, and guidance prohibiting the use of federal assistance for any activity concerning legislation or appropriations designed to influence the U.S. Congress or a state legislature; and

B. Exception. If permitted by applicable federal law, regulations, requirements, or guidance, such lobbying activities described above may be undertaken through the Recipient's or Subrecipient's proper official channels.

C. Political Activity. The Recipient agrees to comply with:

I. The Hatch Act, 5 U.S.C. chapter 15, which limits the political activities of state and local government agencies supported in whole or in part with federal assistance, including the political activities of state and local government officers and employees whose principal governmental employment activities are supported in whole or in part with federal assistance;

II. U.S. Office of Personnel Management regulations, "Political Activity of State or Local Officers or Employees," 5 C.F.R. part 151; and

III. 49 U.S.C. § 5323(l)(2) and 23 U.S.C. § 142(g), which limits the applicability of the Hatch Act, as follows:

a. The Hatch Act does not apply to nonsupervisory employees of a public transportation system, or any other agency or entity performing related functions, based upon the Award of federal assistance under 49 U.S.C. chapter 53 or 23 U.S.C. § 142(a)(2); but

b. Notwithstanding the preceding section 4(e)(3)(ii) of this Master Agreement, the Hatch Act does apply to a nonsupervisory employee if imposed for a reason other than the Award of federal assistance to its employer under 49 U.S.C. chapter 53 or 23 U.S.C. § 142(a)(2).

D. Lobbying and Disclosure Certification

This certification is a material representation of fact upon which reliance was placed when this transaction was made or entered into. Submission of this certification is a prerequisite for making or entering into this transaction imposed by 31 U.S.C. § 1352 (as amended by the Lobbying Disclosure Act of 1995). Any person who fails to file the required certification shall be subject to a civil penalty of not less than $10,000 and not more than $100,000 for each such failure.

The undersigned certifies or affirms the truthfulness and accuracy of the contents of the statements submitted on or with this certification and understands that the provisions of 31 U.S.C. Section 3801, et seq., are applicable thereto.

Name of Company	Printed Name of Person Completing Form
Date	**Signature**

Awards Exceeding $150,000

18. Environmental Protection (Clean Air and Clean Water)

The Recipient agrees to comply with the regulations within the Clean Air Act (42 U.S.C. §§ 7401 - 7671q.) and the Federal Water Pollution Control Act (33 U.S.C. §§ 1251 - 1388), as amended. Contracts and subgrants of amounts in excess of $150,000 must contain a provision that requires the non-federal award to agree to comply with all applicable standards, orders or regulations issued pursuant to the Clean Air Act (42 U.S.C. §§ 7401 - 7671q) and the Federal Water Pollution Control Act as amended (33 U.S.C. §§ 1251 - 1388). Violations must be reported to the 64 Federal awarding agency and the Regional Office of the Environmental Protection Agency (EPA).

State of Texas Procurement Contract Clauses

State of Texas - Procurement Types Summary:

All Texas-Assisted Third-Party Contracts and Subcontracts

1. Debarment
2. Family Code Child Support Obligation Certification
3. Debts and Delinquencies Affirmations
4. Disaster Recovery Plan
5. Disclosure of Prior State Employment
6. Entities that Boycott Israel
7. Federal Executive Order 13224 Excluded Parties
8. False Statements
9. Financial Participation Prohibited Affirmation
10. Foreign Terrorist Organizations
11. Disaster Relief Contract Violation
12. Public Information Act
13. Signature Authority
14. State Auditor's Right to Audit
15. Suspension and Debarment
16. Assignment
17. Contracting Information Responsibilities
18. Human Trafficking Prohibition

1. 34 TAC §20.585 Debarment

The Recipient agrees that The State of Texas, in order to protect the interests of the state may:

A. Conduct an investigation upon a complaint regarding a contractor's acts and omissions in procurement or performance of that contract where the complaint may constitute cause for debarment;

B. Cancel one or more of the contractor's active or pending contracts upon a complaint regarding the contractor's acts and omissions in procurement or performance of that contract where the complaint may constitute cause for debarment;

C. Assess actual damages and costs incurred due to contractor's failure to perform as specified in the contract;

D. Debar a contractor for a specified period of time; and

E. Take any other action authorized by law.

2. §231.006 Family Code Child Support Obligation Certification

Under Section 231.006(d) of the Texas Family Code, the Sub-recipient certifies that the individual or business entity named in this Agreement is not ineligible to receive the specified GRANT and acknowledges that this Agreement may be terminated and payment or grant funds may be withheld if this certification is inaccurate.

3. §2252.903 Gov't Code Debts and Delinquencies Affirmations

Sub-recipient agrees that any payments due it under the Agreement shall be applied toward any debt or delinquency that is

owed to the State of Texas.

4. §444.190 Gov't Code Disaster Recovery Plan

In accordance with 13 TAC (Texas Administrative Code) §6.94(a)(9), Sub-recipient shall provide descriptions of its business continuity and disaster recovery plans

5. §2254.033 Gov't Code Disclosure of Prior State Employment

In accordance with Section 2254.033 of the Texas Government Code, relating to consulting services, RESPONDENT certifies that it does not employ an individual who has been employed by TxDOT or another agency at any time during the two years preceding the submission of the Response or, in the alternative, RESPONDENT has disclosed in its Response the following:

A. The nature of the previous employment with TxDOT or the other agency;

B. The date the employment was terminated; and

C. The annual rate of compensation for the employment at the time of its termination.

6. §2271.001 Gov't Code Entities that Boycott Israel

Pursuant to Section 2271.001 of the Texas Government Code, Sub-recipient certifies that either:

A. It meets an exception criterion under Section 2271.002, or

B. It does not boycott Israel and will not boycott Israel during the term of this Agreement.Sub-recipient shall in a writing to TxDOT state any fact(s) that make it exempt from the boycott certification.

7. Federal Executive Order 13224 Excluded Parties

Sub-recipient certifies that it is not listed on the prohibited vendors list authorized by Executive Order 13224, Blocking Property and Prohibiting Transactions with Persons Who Commit, Threaten to Commit, or Support Terrorism", published by the United States Department of the Treasury, Office of Foreign Assets Control.

8. §2155.077(a)(2) Gov't Code False Statements

Sub-recipient represents and warrants that all statements and information prepared and submitted in this document are current, complete, true and accurate. Submitting a false statement or material misrepresentation made during the performance of a contract is a material breach of contract and may void this agreement.

9. §2155.004 Gov't Code Financial Participation Prohibited Affirmation

Under Section 2155.004(b) of the Texas Government Code, Sub-recipient certifies that the individual or business entity named in this Agreement is not ineligible to receive the specified agreement/GRANT and acknowledges that this agreement may be terminated, and payment withheld if this certification is inaccurate.

10. §2252.152 Gov't Code Foreign Terrorist Organizations

Sub-recipient represents and warrants that is not engaged in business with Iran, Sudan, or a foreign terrorist organization as prohibited by Section 2252.152 of the Texas Government Code.

11. §2155.006 and 2261.053 Gov't Code Prior Disaster Relief Contract Violation

Under Sections 2155.006 and 2261.053 of the Texas Government Code, the Sub-recipient certifies that the individual or business entity named in this Agreement is not ineligible to receive the specified agreement/GRANT and acknowledges that this agreement may be terminated and payment withheld if this certification is inaccurate.

12. Chapter 552, Gov't Code and §2252.907 Gov't Code Public Information Act

Information, documentation, and other material in connection with this Agreement may be subject to public disclosure pursuant to Chapter 552 of the Texas Government Code (the "Public Information Act"). In accordance with Section 2252.907 of the Texas Government Code, the Sub-recipient is required to make any information created or exchanged with the State pursuant to the Agreement and not otherwise excepted from disclosure under the Texas Public Information Act, available in a format that is accessible by the public at no additional charge to the State.

13. §2252.0012 Gov't Code Signature Authority

The Sub-recipient represents and warrants that the individual executing this Agreement is authorized to sign this Agreement on behalf of the Sub-recipient and to bind the Sub-recipient.

14. §2262.154 Gov't Code State Auditor's Right to Audit

The state auditor may conduct an audit or investigation of any entity receiving funds from the state directly under the contract or indirectly through a subcontract under the contract. The acceptance of funds directly under the contract or indirectly through a subcontract under the contract acts as acceptance of the authority of the state auditor, under the direction of the legislative audit committee, to conduct an audit or investigation in connection with those funds. Under the direction of the legislative audit committee, an entity that is the subject of an audit or investigation by the state auditor must provide the state auditor with access to any information the state auditor considers relevant to the investigation or audit.

15. §2155.077 Gov't Code Suspension and Debarment

Sub-recipient certifies that it and its principals are not suspended of debarred from doing business with the State of Texas or federal government as listed on the State of Texas Debarred Vendor List as maintained by the Texas Comptroller of Public Accounts and the System for Award Management (SAM) maintained by the General Services Administration.

16. §2262.056 (b) Gov't Code Assignment

Sub-recipient shall not assign its rights under the Agreement or delegate the performance of its duties under the Agreement without prior written approval from the TxDOT. Any attempted assignment in violation of this provision is void and without effect.

17. §552.372 Gov't Code Contracting Information Responsibilities

In accordance with Section 552.372 of the Texas Government Code, Sub-recipient agrees to:

A. preserve all contracting information related to the Agreement as provided by the records retention requirements applicable to TxDOT for the duration of the Agreement,

B. promptly provide to TxDOT any contracting information related to the Agreement that is in the custody or possession of the Sub-recipient on request of TxDOT, and

C. on termination or expiration of the contract, either provide at no cost to TxDOT all contracting information related to the Agreement that is in the custody or possession of the Sub-recipient or preserve the contracting information related to the Agreement as provided by the records retention requirements applicable to TxDOT. Except as provided by Section 552.374(c) of the Texas Government Code, the requirements of Subchapter J, Chapter 552, Government Code, may apply to the Agreement and the Sub-recipient agrees that the Agreement can be terminated if the Sub-recipient knowingly or intentionally fails to comply with a requirement of that subchapter.

18. §2155.0061 Gov't Code Human Trafficking Prohibition

Under Section 2155.0061 of the Texas Government Code, the Sub-recipient certifies that the individual or business entity named in the Agreement is not ineligible to receive the specified Agreement/GRANT and acknowledges that this Agreement may be terminated and payment withheld if this certification is inaccurate.

Form PTN-130 (Rev. 6/21)
Page 13 of 14

Certification to Purchaser

1. The undersigned vendor certifies that the manufactured good(s) furnished will meet or exceed the specifications, and/or that services rendered will comply with the terms of the solicitation or contract.
2. The undersigned vendor certifies that it has read all of the bid, proposal, or contract documents and agrees to abide by the terms, certifications, and conditions thereof.

Name of Company:

Address:

Telephone:

SS# or Tax ID#:

Printed Name of Person Completing Form:

Signature

Date:

Description of Commodity Service:

Disadvantaged Business Enterprise Information

Type of Organization (check the application type of organization)

☐ Sole Proprietorship ☐ General Proprietorship ☐ Corporation ☐ Limited Partnership ☐ Limited Proprietorship

Is your firm a DBE? ☐ Yes ☐ No

If yes, what type?

Form PTN-130 (Rev. 6/21)
Page 14 of 14

Third Party Procurement Contract Provisions

Third Party Procurement Contracting Provisions

Select the additional third-party procurement contracting provisions based on the type of solicitation you're procuring:

**Procurements cannot be combined. Example: Construction procurement and Rolling Stock procurement, use separate PTN 130s for each.*

Reset this Page

- ☐ 1. **Construction Related Clauses**
  - ☐ Federal and State
  - ☐ State Clauses
- ☐ 2. **Rolling Stock Related Clauses**
  - ☐ Federal and State
  - ☐ State Clauses
- ☐ 3. **Professional Services / Architectural Engineering**
  - ☐ Federal and State
  - ☐ State Clauses
- ☐ 4. **Materials & Supplies Related Clauses**
  - ☐ Federal and State
  - ☐ State Clauses
- ☐ 5. **Operations / Management Related Clauses**
  - ☒ Federal and State
  - ☐ State Clauses

EXHIBIT G – ACKNOWLEDGMENT OF ADDENDA

Vehicle Maintenance Services
#2021 GCTD 009

The undersigned acknowledges receipt of the following addenda to the GCTD's Request for Proposals (insert number and date of each addendum). Attach each acknowledged addendum to this exhibit.

ADDENDUM NUMBER _____ DATED:_____

ADDENDUM NUMBER _____ DATED:_____

ADDENDUM NUMBER _____ DATED:_____

ADDENDUM NUMBER _____ DATED:_____

ADDENDUM NUMBER _____ DATED:_____

ADDENDUM NUMBER _____ DATED:_____

ADDENDUM NUMBER _____ DATED:_____

ADDENDUM NUMBER _____ DATED:_____

If Respondent fails to acknowledge receipt of all addenda, then the proposal is considered non-responsive to the RFP and the GCTD may reject Respondent's proposal.

DATE: _____

RESPONDENT: _____

SIGNATURE: _____

PRINT NAME: _____

TITLE: _____

EXHIBIT H – RESPONDENT INFORMATION FORM

Instructions: *Respondent shall complete the following form as part of the RFP response.*

COMPANY INFORMATION

LEGAL COMPANY NAME: _____

DBA COMPANY NAME: _____

DUNS NUMBER: _____

COMPANY ADDRESS: _____

COMPANY PHONE NUMBER: _____

NORMAL BUSINESS HOURS: _____

ON-CALL HOURS, IF APPLICABLE: _____

The following list shall be answered for current company policies and practices.

PERFORM BACKGROUND CHECKS:	**YES**	**NO**
HAVE A DRUG AND ALCOHOL PROGRAM:	**YES**	**NO**
HAVE ACCESS TO INTERNET:	**YES**	**NO**
HAVE AN E-MAIL ADDRESS:	**YES**	**NO**

FINANICAL INFORMATION

Please provide the following information in a separate, sealed document titled "Financials" included with this proposal. Only one copy is needed for the Proposal

- **Three (3) years of audited financial statements**

OR

- **Most recent audited financial statement, plus previous three (3) years of income/expense sheets, balance sheets, and debt/income ratios.**

Respondents who cannot provide either of the above items shall request an exception to provide the required financial statements in another form and state the reason(s) for the substitution.

Reason for substitution: _____

_____

_____

The GCTD considers financial information as sensitive and confidential and permits Respondents to submit a single copy in a sealed envelope marked with a return address, solicitation number, solicitation title, and "CONFIDENTIAL." The GCTD shall destroy the financial information after the contract is awarded.

REQUEST FOR EXCEPTIONS, VARIATIONS AND APPROVED EQUALS

PRINTED NAME:		**DATE:**	
SIGNATURE:		**TITLE:**	
RESPONDENT:		**ADDRESS - TELEPHONE:**	
RFP NUMBER:		**RFP DATE:**	
RFP REFERENCE (PART, PAGE AND PARAGRAPH):			
PROPOSED EXCEPTION, VARIATION OR EQUAL:			
REASON:			
AGENCY USE ONLY			
REVIEWED BY:	**DATE:**	**CONTROL #:**	
ACTION TAKEN:			
COMMENT:			
SIGNATURE:			

PLEASE COMPLETE ONE FOR EACH SUBSTITUTION.
USE THIS FORM FOR EACH REQUEST.

TRAINING AND CERTIFICATION

Please list specific SAE, ASE, NAPA, and Service Technicians Society training courses taken and certifications received by the service technicians and/or vehicle maintenance mechanics. Attach documents supporting any training and certifications claimed to the "Vehicle Maintenance Service Capabilities" document.

TRAINING COURSE / CERTIFICATION	INSTRUCTOR / ACCREDITATION	DATE COMPLETED

PERMITS

Please list permits held for vehicle towing only and any zone or county restrictions. Additional permits may be listed in the "Vehicle Maintenance Service Capabilities" document.

CITY/JURISDICTION	PERMIT NUMBER	RESTRICTIONS

QUALITY CONTROL PROCEDURES

Please list all quality control (QC) procedures currently documented and employed in the workplace, the effective date (when the procedure was first implemented), and the process owner (who is responsible for managing the procedure). If no incoming inspections, training & certification, or work inspection procedures are followed, leave blank. Additional QC procedures may be listed in the "Vehicle Maintenance Service Capabilities" document.

PROCEDURE	EFFECTIVE DATE	PROCESS OWNER
Incoming Parts & Supplies Inspection		
Technician/mechanic Training & Certification		
Work Inspection (QC checks)		
Other procedures (please list below as needed)		

SUBCONTRACTOR INFORMATION

Please provide the following information for each subcontractor, if any. Provide additional copies of this page in the proposal as needed.

COMPANY #1 NAME: _____

DUNS NUMBER: _____

EXPERIENCE: _____

_____

QUALIFICATIONS: _____

_____

REFERENCE COMPANY NAME: _____

REFERENCE PHONE NUMBER: _____

COMPANY #2 NAME: _____

DUNS NUMBER: _____

EXPERIENCE: _____

_____

QUALIFICATIONS: _____

_____

REFERENCE COMPANY NAME: _____

REFERENCE PHONE NUMBER: _____

COMPANY #3 NAME: _____

DUNS NUMBER: _____

EXPERIENCE: _____

_____

QUALIFICATIONS: _____

_____

REFERENCE COMPANY NAME: _____

REFERENCE PHONE NUMBER: _____

REFERENCES

The Respondent shall provide at least three (3) references for which the same or similar Service has been provided within the past five (5) years.

Company:	Contact Person:
Email:	Phone:
Address:	
Type of Service Provided:	

Company:	Contact Person:
Email:	Phone:
Address:	
Type of Service Provided:	

Company:	Contact Person:
Email:	Phone:
Address:	
Type of Service Provided:	

SIGNATURE OF AUTHORIZED OFFICIAL

The information provided on the Respondent Information Form and the associated "Vehicle Maintenance Service Capabilities" document accurately reflects the Respondent's company, vehicle maintenance service capabilities, service technician and mechanic training and certification, permits, and the subcontractors.

DATE: _____

RESPONDENT: _____

SIGNATURE: _____

PRINT NAME: _____

TITLE: _____

EXHIBIT I – PRICE PROPOSAL FORM

Vehicle Maintenance Services
Solicitation #2021 GCTD 009

Gulf Coast Transit District
1415 North 33rd Street
Texas City, Texas 77590

The Undersigned Agrees That:

A. No Federal, State, County or Municipal taxes have been included in the quoted prices and none will be added.
B. Prices in this proposal have not knowingly been disclosed with any other Respondent and will not be prior to award.
C. Prices in this proposal have been arrived at independently, without consultation, communication, or agreement for the purpose of restricting competition.
D. No attempt has been made nor will be to induce any other person or firm to submit a proposal for the purpose of restricting competition.
E. The individual signing this proposal certifies that the Respondent has not violated the antitrust laws of the State, Section 15.01 et seq., Texas Business and Commerce Code, or the Federal antitrust laws.
F. The individual signing this proposal certifies that he/she is a legal Agent of the Respondent, authorized to represent the Respondent, and is legally responsible for the offer with regard to supporting documentation and prices provided.

Please fill in pricing for all services that your firm would like to perform. The pricing is separated by the location of the vehicle – Galveston County in Texas City and Brazoria County in Lake Jackson.

_____
(Company Name) (Name of Authorized Agent – Printed)

_____
(Street Address / P.O. Box) (Authorized Agent Signature)

_____
(City / State / Zip Code) (Date)

_____
(Tax ID No.) (Legal Business Name)

CONTRACT PRICING – Vans, Cutaway Buses, and Heavy Duty Buses – Galveston County

Year 1 Pricing			
Galveston County Service Area	**Vehicle Type**		
	Van - Passenger	**Bus - Gasoline**	**Heavy Duty Bus**
MAINTENANCE			
Scheduled/Preventative Maintenance			
5,000 Mile Oil Change/Multi-Point Inspection			
18,000 Mile Program			
18,000 Mile Wheelchair Lift Inspection/Repair Program			
Other Mile Program PM (Labor Hourly Rate)			
Unscheduled/On-Demand Maintenance			
Parts Mark-Up			
Labor Hourly Rate			
Vehicle Towing			
Loading			
Mileage			
Drive Shaft Drop Fee			
Vehicle Tire Replacement and Repair			
Parts Mark-Up			
Mount			
Balance			
Vehicle Tire Repair			

Year 2 Pricing			
Galveston County Service Area	**Vehicle Type**		
	Van - Passenger	**Bus - Gasoline**	**Heavy Duty Bus**
MAINTENANCE			
Scheduled/Preventative Maintenance			
5,000 Mile Oil Change/Multi-Point Inspection			
18,000 Mile Program			
18,000 Mile Wheelchair Lift Inspection/Repair Program			
Other Mile Program PM (Labor Hourly Rate)			
Unscheduled/On-Demand Maintenance			
Parts Mark-Up			
Labor Hourly Rate			
Vehicle Towing			
Loading			
Mileage			
Drive Shaft Drop Fee			
Vehicle Tire Replacement and Repair			
Parts Mark-Up			
Mount			
Balance			
Vehicle Tire Repair			

Year 3 Pricing			
Galveston County Service Area	**Vehicle Type**		
	Van - Passenger	**Bus - Gasoline**	**Heavy Duty Bus**
MAINTENANCE			
Scheduled/Preventative Maintenance			
5,000 Mile Oil Change/Multi-Point Inspection			
18,000 Mile Program			
18,000 Mile Wheelchair Lift Inspection/Repair Program			
Other Mile Program PM (Labor Hourly Rate)			
Unscheduled/On-Demand Maintenance			
Parts Mark-Up			
Labor Hourly Rate			
Vehicle Towing			
Loading			
Mileage			
Drive Shaft Drop Fee			
Vehicle Tire Replacement and Repair			
Parts Mark-Up			
Mount			
Balance			
Vehicle Tire Repair			

OPTION YEAR 1 - Year 4 Pricing			
Galveston County Service Area	**Vehicle Type**		
	Van - Passenger	**Bus - Gasoline**	**Heavy Duty Bus**
MAINTENANCE			
Scheduled/Preventative Maintenance			
5,000 Mile Oil Change/Multi-Point Inspection			
18,000 Mile Program			
18,000 Mile Wheelchair Lift Inspection/Repair Program			
Other Mile Program PM (Labor Hourly Rate)			
Unscheduled/On-Demand Maintenance			
Parts Mark-Up			
Labor Hourly Rate			
Vehicle Towing			
Loading			
Mileage			
Drive Shaft Drop Fee			
Vehicle Tire Replacement and Repair			
Parts Mark-Up			
Mount			
Balance			
Vehicle Tire Repair			

OPTION YEAR 2 - Year 5 Pricing			
Galveston County Service Area	**Vehicle Type**		
	Van - Passenger	**Bus - Gasoline**	**Heavy Duty Bus**
MAINTENANCE			
Scheduled/Preventative Maintenance			
5,000 Mile Oil Change/Multi-Point Inspection			
18,000 Mile Program			
18,000 Mile Wheelchair Lift Inspection/Repair Program			
Other Mile Program PM (Labor Hourly Rate)			
Unscheduled/On-Demand Maintenance			
Parts Mark-Up			
Labor Hourly Rate			
Vehicle Towing			
Loading			
Mileage			
Drive Shaft Drop Fee			
Vehicle Tire Replacement and Repair			
Parts Mark-Up			
Mount			
Balance			
Vehicle Tire Repair			

CONTRACT PRICING – Vans and Cutaway Buses – Brazoria County

Year 1 Pricing		
Brazoria County Service Area	**Vehicle Type**	
	Van - Passenger	**Bus – Gasoline**
MAINTENANCE		
Unscheduled/On-Demand Maintenance		
Parts Mark-Up		
Labor Hourly Rate		
Vehicle Towing		
Loading		
Mileage		
Drive Shaft Drop Fee	[redacted]	

Year 2 Pricing		
Brazoria County Service Area	**Vehicle Type**	
	Van - Passenger	**Bus - Gasoline**
MAINTENANCE		
Unscheduled/On-Demand Maintenance		
Parts Mark-Up		
Labor Hourly Rate		
Vehicle Towing		
Loading		
Mileage		
Drive Shaft Drop Fee	[redacted]	

Year 3 Pricing		
Brazoria County Service Area	**Vehicle Type**	
	Van - Passenger	**Bus - Gasoline**
MAINTENANCE		
Unscheduled/On-Demand Maintenance		
Parts Mark-Up		
Labor Hourly Rate		
Vehicle Towing		
Loading		
Mileage		
Drive Shaft Drop Fee	[redacted]	

OPTION YEAR 1 - Year 4 Pricing		
Brazoria County Service Area	**Vehicle Type**	
	Van - Passenger	**Bus - Gasoline**
MAINTENANCE		
Unscheduled/On-Demand Maintenance		
Parts Mark-Up		
Labor Hourly Rate		
Vehicle Towing		
Loading		
Mileage		
Drive Shaft Drop Fee	[redacted]	

OPTION YEAR 2 - Year 5 Pricing		
Brazoria County Service Area	**Vehicle Type**	
	Van - Passenger	**Bus - Gasoline**
MAINTENANCE		
Unscheduled/On-Demand Maintenance		
Parts Mark-Up		
Labor Hourly Rate		
Vehicle Towing		
Loading		
Mileage		
Drive Shaft Drop Fee		

EXHIBIT J – GCTD VEHICLES LIST

Galveston County						
VEH ID	**YEAR**	**MAKE / MODEL**	**VIN**	**MILEAGE**	**TYPE**	**CAPACITY**
7711	2009	FORD EL DORADO	1GBDV13W18D207711	353,603	BUS	21 PSG / 2 WC
1186	2010	EL DORADO	1FDFE4FS3ADA11186	364,888	BUS	16 PSG / 2 WC
2406	2010	GOSHEN BUS	1FDFE4FP3ADA32406	173,935	BUS	12 PSG / 2 WC
3301	2013	GOSHEN BUS	1FDFE4FS7DDA93301	259,596	BUS	12 PSG / 2 WC
3329	2013	GOSHEN BUS	1FDFE4FS7DDA93329	282,049	BUS	12 PSG / 2 WC
5149	2010	Ford-150	1FTEW1C85AFA15149	131,991	TRUCK	N/A
5906	2010	DODGE AMERIVAN	2D4RN4DE8AR205906	77,570	VAN	5 PSG / 1 WC
5907	2010	DODGE AMERIVAN	2D4RN4DEXAR205907	220,185	VAN	5 PSG / 1 WC
6874	2019	STARCRAFT	1FDAF5GY1KED56874	54,890	BUS	30 PSG / 1 WC
6877	2019	STARCRAFT	1FDAF5GY7KED56877	106,713	BUS	30 PSG / 1 WC
6882	2019	STARCRAFT	1FDAF5GY0KED56882	144,212	BUS	30 PSG / 1 WC
6896	2019	STARCRAFT	1FDAF5GY0KED56896	78,383	BUS	30 PSG / 1 WC
6898	2016	STARCRAFT	1FDGF5GYXGEB56898	13,466	BUS	30 PSG / 1 WC
6899	2016	STARCRAFT	1FDGF5GY1GEB56899	23,344	BUS	30 PSG / 1 WC
6911	2008	CHEVY UPLANDER	1GBDV13W48D206911	194,063	VAN	9 PSG / 2 WC
7073	2019	RAM-PROMASTER	3C6URVUG7KE537073	298,303	VAN	9 PSG / 2 WC
7074	2019	RAM-PROMASTER	3C6URVUG9KE537074	217,790	VAN	9 PSG / 2 WC
7298	2018	GLAVAL	1FDFE4FS2HDC57298	313,760	BUS	19 PSG / 2 WC
7795	2009	FORD EL DORADO	1FDFE45S89DA37795	370,182	BUS	21 PSG / 2 WC
7796	2009	FORD EL DORADO	1FDFE45SX9DA37796	329,420	BUS	21 PSG / 2 WC
8379	2005	FORD ECONOLINE VAN	1FBSS31L05HB18379	391,142	VAN	15 PSG / 0 WC
9716	2019	CHEVROLET-G4500	1HA6GUBB2KN009716	406,275	VAN	9 PSG / 2 WC
9784	2019	CHEVROLET-G4500	1HA6GUBB8KN009784	133,459	VAN	9 PSG / 2 WC
332	2020	RAM-PROMASTER	3C6URVUGXKE560332	336,913	VAN	9 PSG / 2 WC

3964	2020	RAM-PROMASTER	3C6URVUG2LE113964	362,726	VAN	9 PSG / 2 WC

Brazoria County						
VEH ID	**YEAR**	**MAKE / MODEL**	**VIN**	**MILEAGE**	**TYPE**	**CAPACITY**
1181	2010	EL DORADO	1FDFE4FS4ADA11181	353,603	BUS	16 PSG / 2 WC
1185	2010	EL DORADO	1FDFE4FS1ADA11185	364,888	BUS	16 PSG / 2 WC
1967	2018	GLAVAL	1FDFE4FS6HDC61967	173,935	BUS	19 PSG / 2 WC
2401	2010	GOSHEN BUS	1FDFE4FP4ADA32401	259,596	BUS	12 PSG / 2 WC
3267	2013	GOSHEN BUS	1FDFE4FS0DDA93267	282,049	BUS	12 PSG / 2 WC
3512	2016	STARCRAFT	1FDGF5GY8GEB63512	131,991	BUS	30 PSG / 1 WC
5689	2007	FORD E-450	1FDAF5GY6KED56899	77,570	BUS	20 PSG / 2 WC
5909	2010	DODGE AMERIVAN	2D4RN4DE3AR205909	22,0185	VAN	5 PSG / 1 WC
6879	2019	STARCRAFT	1FDAF5GY0KED56879	54,890	BUS	30 PSG / 1 WC
6893	2019	STARCRAFT	1FDAF5GY5KED56893	10,6713	BUS	30 PSG / 1 WC
6900	2016	STARCRAFT	1FDGF5GY4GEB56900	14,4212	BUS	30 PSG / 1 WC
7072	2019	RAM-PROMASTER	3C6URVUG5KE537072	78,383	VAN	9 PSG / 2 WC
3971	2020	RAM-PROMASTER	3C6URUGXLE113971	13,466	VAN	9 PSG / 2 WC
3980	2020	RAM-PROMASTER	3C6URVUG0LE113980	23,344	VAN	9 PSG / 2 WC

Heavy Duty Vehicles						
VEH ID	**YEAR**	**MAKE / MODEL**	**VIN**	**MILEAGE**	**TYPE**	**CAPACITY**
5279	2014	NEW FLYER	5FYD8FV13EB045279	194,063	BUS	38 PSG / 2 WC
5280	2014	NEW FLYER	5FYD8FV1XEB045280	298,303	BUS	38 PSG / 2 WC
5281	2014	NEW FLYER	5FYD8FV13EB045281	217,790	BUS	38 PSG / 2 WC
9425 IV717	2012	GILLIG	15GGB2710C1179425	313,760	BUS	32 PSG / 2 WC
9427 IV719	2012	GILLIG	15GGB2716B1179427	370,182	BUS	32 PSG / 2 WC
9428 IV720	2012	GILLIG	15GGB2716C1179428	329,420	BUS	32 PSG / 2 WC
9429 IV721	2012	GILLIG	15GGB2718C1179429	391,142	BUS	32 PSG / 2 WC
9430 IV722	2012	GILLIG	15GGB2714C1179430	406,275	BUS	32 PSG / 2 WC

Notes:
1. Capacity counts are approximate and are meant to demonstrate relative size of the vehicle for purposes of lift capacity and service task time estimates.
2. Bus type refers to medium-duty, cutaway buses; van type refers to minivans or full-size passenger and panel-type vans between 5-15 passenger capacity. Heavy Duty Buses (35-40 foot buses) are provided separately.
3. Capacity is designated as number of passenger (PSG) and wheelchair (WC) positions.

EXHIBIT K – VEHICLE SCHEDULED SERVICES CHECKLISTS

This page intentionally left blank

MULTI-POINT INSPECTION CHECKLIST

COMPLETE AFTER EVERY 5,000- OR 18,000-MILE SERVICE OR REPAIR

DATE COMPLETED ____ VEHICLE ID _____

CONTRACTOR _____ VIN _____

TECHNICIAN _____ MILEAGE _____

____ REPAIR ____PASS QC CHECK _____

Initial	Required Check
	Tire Wear & Proper Pressure Inspect for wear and check air pressure, including spare.
	Accessory Drive Belt
	Battery Performance Check state of charge. Check for leaks and loose, frayed, or damaged cables. Check battery connections for corrosion and clean if necessary.
	Engine Air Filter
	Exhaust System Check for leaks, damage, loose parts, and foreign material.
	Horn, Exterior Lamps, Turn Signals & Hazard Warning System Operation
	Fluid Levels Check engine oil level. Check and top-up brake, coolant reservoir, transmission (if equipped with under hood dipstick), steering, and windshield washer fluids as needed. Check for oil and fluid leaks.
	Radiator, Heater & Air Conditioning Hoses
	Suspension Components Check steering linkage, shocks and struts and other components for leaks and damage.
	Windshield Cracks, Chips or Pits
	Windshield Washer Spray & Wiper Operation Verify spray covers windshield and wipers rotate across windshield at all speeds. Clean and/or replace blades or arms as necessary.
	State Inspection (if required)

5,000 MILE SERVICE CHECKLIST

DATE COMPLETED ____ VEHICLE ID _____

CONTRACTOR _____ VIN _____

TECHNICIAN _____ MILEAGE _____

____ REPAIR ____PASS QC CHECK _____

Initial	Required Check
	Change Oil & Oil Filter Change oil and replace oil filter. Dispose of oil and filters in accordance with regulations.
	Check Cabin Air Filter(s) Inspect if equipped and replace as needed.
	Lubricate Chassis Inspect and lubricate non-sealed steering linkages, ball joints, suspension joints, driveshaft, and U-joints.
	Check Engine Coolant Check radiator and overflow level and strength (refill/replace as needed). Dispose of fluids in accordance with regulations.
	Rotate Tires Rotate tires, inspect tires for wear and measure tread depth. Check that spare tire is properly stowed.
	Inspect Wheels Inspect wheels, mounting studs, and related components for abnormal noise, wear, looseness or drag. Check lug nuts torque (after tire rotation); tighten as needed.
	Inspect Brake System Inspect brake pads, shoes, rotors, drums, lines and hoses, and parking brake system.
	Check Safety Warning Lamps Check operation of brake, ABS, airbag, and safety belt warning indicators.
	Check Lighting Check function of all interior and exterior lights.
	Multi-point Inspection

18,000 MILE SERVICE CHECKLIST

DATE COMPLETED ____ VEHICLE ID _____

CONTRACTOR _____ VIN _____

TECHNICIAN _____ MILEAGE _____

____ REPAIR ____PASS QC CHECK _____

Initial	Required Checks (1 of 3)
	LIGHTING & ELECTRICAL SYSTEM
	Check headlights aim and adjust as needed.
	Verify vehicle wiring is clear of sharp edges and moving parts.
	Inspect for broken frayed or cracked, cut wires.
	Verify switch, control module and sensor operations.
	INTERIOR, DOORS & WINDOWS
	Inspect all door and window seals for water intrusion, cracks, and sealing (apply light coat of silicone as necessary).
	Inspect entry door(s) for damage and lubrication: Check opening and closing for proper speed; adjust as necessary. Check door motor and base plate for mounting tightness. Check and lubricate upper and lower sliding door tracks and/or pins. Check and clean sliding door contact switches, if equipped. Check and lubricate door rubber weather strips.
	Verify proper function of emergency latches.
	Inspect handrails, poles and tethers for damage or looseness.
	Check all seat mounting bolts/brackets for tightness.
	Check seat belts, latches and controls for wear and proper operation.
	Check wheelchair straps for wear and proper operation.
	Verify proper function of gauges in instrument cluster.
	Check proper function and mounting of destination sign and fare box.
	EXTERIOR & BODY
	Inspect seals for cracks, shrinkage, or damage
	Check for proper mounting of spare tire.
	Check and lubricate all door hinges, latches, and outside locks.
	Check and clean body and door drain holes.

18,000 MILE SERVICE CHECKLIST (Continued)

Initial	Required Checks (2 of 3)
	CLIMATE CONTROL
	Check condition of compressor and components: Drive belt tension. Cylinder under load (adjust if needed). Clutch assembly and wiring harness for signs of overheating or slippage. Platform mounting bolts for tightness.
	Check system hoses, hose clamps, fans and fan guards, belts and fittings, and valve caps and seals for tightness, damage, or leaks.
	Check refrigerant level at receiving tank sight glass, check for oil leaks, and measure pressure with manifold gauge.
	Check heater: Clean and straighten heater core bent fins. Inspect lines for leaks and wear.
	Verify proper function of fan and temperature controls.
	ENGINE, CHASSIS & SUSPENSION
	Inspect engine cooling system and hoses.
	Check battery connections and cables and clean or replace if necessary.
	Inspect steering linkage, ball and U-joints, suspension, tie rod ends, and driveshaft.
	Inspect brake pads, shoes, rotors, drums, lines and hoses and parking brake system.
	Inspect exhaust system and heat shields.
	Check air-ride suspension assembly fittings torque (tighten or replace as needed).
	Wash (no detergent) and lubricate brake retarder.
	Check welds at frame and outriggers, bulkheads, and body.
	Every 30,000 (as needed): Check/Replace Front Wheel Bearings Grease/Seals & Inspect/Adjust Bearings, Check/Change Automatic Transmission Fluid
	Every 60,000 (as needed): Check/Replace Spark Plugs, Check/Change Transfer Case Fluid & Transmission Fluid, Inspect Accessory Drive Belt
	Every 100,000 (as needed): Check/Change Engine Coolant, Check/Replace Rear Axle Lubricant & Transaxle Fluid & Filter, Replace Accessory Drive Belt
	Continued

18,000 MILE SERVICE CHECKLIST (Continued)

Initial	Required Checks (3 of 3)
	ADA WHEELCHAIR LIFT INSPECTION
	Test lift-vehicle interlock system: Verify lift cannot be powered unless vehicle interlocks activated. Verify interlocks cannot be disengaged unless lift is fully stowed.
	Check threshold warning device for proper function: Audible and visual warnings activated if threshold area entered when platform is at least one inch below vehicle floor level (public use lifts).
	Verify main power switch enables and disables the lift control system.
	Check control pendant illumination when lift and pendant powered on (public use lifts).
	Verify inboard roll-stop does not rise from floor level with load (25 lbs. at center of barrier).
	Verify platform does not rise more than 3 inches above ground when: Safety belt not engaged (public use lifts). Outer barrier not engaged (private use lifts).
	Verify platform lighting functional when lift is powered.
	Verify platform does not stow while occupied (min. 50 lbs.).
	Verify manual back-up operation fully functional.
	Check intercom system function.
	Check Hydraulic Lift System: Inspect piston and sealed gasket for leaks. Change/refill hydraulic (lift pump oil) fluid as required. Inspect piston operation. Lubricate eight (8) lift points. Dispose of fluids in accordance with regulatory requirements. Verify all traveling frame pins and pivots are installed and tight.
	MULTI-POINT INSPECTION
	Perform Multi-point Inspection

EXHIBIT L - NEW FLYER PREVENTATIVE MAINTENANCE MANUAL

This page intentionally left blank

Preventive Maintenance

1. SAFETY PM-1

1.1. Safety Procedures PM-1

1.2. Insulation Foam Safety PM-1

2. PREVENTIVE MAINTENANCE PM-2

2.1. Introduction PM-2

2.2. Rear Axle Operating Conditions PM-2

2.3. Run-In Maintenance PM-3

2.4. Conditional Maintenance PM-3

2.5. Preventive Maintenance Guide PM-4

2.6. Daily Preventive Maintenance PM-8

2.6.1. Exterior Check PM-8

2.6.2. Operational Check PM-8

2.6.3. Wheelchair Ramp PM-9

2.6.4. Wheelchair Tie-Down & Occupant Restraints PM-9

2.6.5. Bike Rack Inspection PM-9

2.6.6. Floor Covering PM-10

2.6.7. Crankcase Breather Tube PM-10

2.6.8. Aftertreatment Exhaust Piping PM-10

2.6.9. Air Intake Piping PM-10

2.7. Weekly Preventive Maintenance PM-10

2.7.1. Radiator PM-10

2.8. Monthly Preventive Maintenance PM-11

2.8.1. Bike Rack General Maintenance Inspection PM-11

2.8.2. Air Tanks PM-12

2.8.3. Fire Extinguisher PM-12

2.9. 6,000 Miles (9,600 km) Preventive Maintenance PM-13

2.9.1. Disc Brake Pad Inspection PM-13

2.9.2. Wheels & Tires Inspection PM-13

2.9.3. Transmission Inspection PM-14

2.9.4. Driveshaft PM-15

2.9.4.1. Inspection PM-15

2.9.4.2. Lubrication PM-16

2.9.5. Steering System Inspection PM-16

2.9.6. Steering Driveshafts PM-18

2.9.6.1. Inspection PM-19

2.9.6.2. Universal Joint Lubrication PM-21

2.9.6.3. Telescoping Spline Lubrication PM-22

The New Flyer vehicles described in this manual may be protected by one or more patents and design applications or registrations in the United States and Canada, and in other countries. Refer to "Vehicle Patent Information" in this manual.
Copyright © 2014 New Flyer Industries Canada ULC

2.9.7. Steering Damper PM-23
2.9.7.1. Cylinder Damping Inspection PM-24
2.9.8. Engine Oil & Filter Change PM-25
2.9.8.1. Engine Oil Change Intervals PM-26
2.9.9. Primary (Suction) Fuel Filter Replacement PM-27
2.9.10. Secondary (Pressure) Fuel Filter Replacement PM-28
2.9.10.1.Fuel System Priming PM-28
2.9.11. Exhaust System PM-29
2.9.12. Shock Absorber Inspection PM-29
2.9.13. Ride Height PM-29
2.9.14. Air Springs PM-29
2.9.15. Front & Rear Axles & Suspension PM-30
2.9.16. Radius Rods PM-30
2.9.17. Air System Functional Tests PM-30
2.9.18. Driver's Window PM-31
2.9.19. Window Emergency Release System PM-31
2.9.20. Interior & Exterior Access Doors PM-32
2.9.21. Roof Vent/Hatch PM-32
2.9.22. Splash Guards PM-33
2.9.23. Windshield Wiper & Washer PM-33
2.9.24. Passenger Seats PM-33
2.9.25. Stanchions & Grab Rails PM-33
2.9.26. Wheelchair Tie-Down & Occupant Restraints PM-33
2.9.27. Interior Panels PM-33
2.9.28. Exterior Panels PM-33
2.9.29. Battery System PM-34
2.9.30. Wheelchair Ramp Inspection PM-35
2.9.30.1.Mechanism PM-35
2.9.30.2.Lubrication PM-36
2.9.31. Driver's Heater/Defroster PM-37
2.9.32. HVAC Return Air Filter PM-38
2.9.33. HVAC Fresh Air Filter PM-38
2.9.34. Rear Axle Breather Tube PM-39
2.9.34.1.Breather Valve Replacement PM-39
2.9.35. Engine Compartment Line Routing Inspection PM-40
2.9.35.1.Line Condition Inspection PM-40
2.9.35.2.Line Routing Inspection PM-41
2.10. 7,500 Miles (12,000 km) Preventive Maintenance PM-43
2.10.1. Air Filter Restriction Indicator Inspection PM-43
2.10.2. Air Filter Replacement PM-44
2.10.2.1.Removal PM-45
2.10.2.2.Inspection PM-45
2.10.2.3.Installation PM-46
2.10.3. Charge Air Cooler & Piping PM-46
2.11. 12,000 Miles (19,300 km) Preventive Maintenance PM-47
2.11.1. Driver's Heater/Defroster PM-47
2.12. 15,000 Miles (24,000 km) Preventive Maintenance PM-48
2.12.1. Cooling System PM-48
2.12.1.1.Coolant Level PM-48

The New Flyer vehicles described in this manual may be protected by one or more patents and design applications or registrations in the United States and Canada, and in other countries. Refer to "Vehicle Patent Information" in this manual.
Copyright © 2014 New Flyer Industries Canada ULC

2.12.1.2.Antifreeze PM-49
2.12.1.3.Supplemental Coolant Additives PM-49
2.12.1.4.Cooling System Components PM-50
2.12.2. Cooling System Pressure Test PM-51
2.12.3. Coolant Filter Replacement PM-52
2.13. 18,000 Miles (29,000 km) Preventive Maintenance PM-53
2.13.1. Engine Mounts PM-53
2.13.2. Power Steering Filter PM-53
2.14. 24,000 Miles (38,600 km) Preventive Maintenance PM-54
2.14.1. Air Dryer PM-54
2.14.1.1.Operation & Leakage Tests PM-54
2.14.1.2.Electric Power Test PM-55
2.14.1.3.Thermostat & Heater Operation PM-55
2.14.2. Adjustable Floor Pedal (AFP) System PM-56
2.15. 30,000 Miles (48,000 km) Preventive Maintenance PM-59
2.15.1. Fuel Tank PM-59
2.15.2. Engine Drive Belts PM-59
2.16. 36,000 Miles (58,000 km) Preventive Maintenance PM-60
2.16.1. Disc Brake Caliper Inspection PM-60
2.16.2. Rear Axle Oil Change PM-60
2.16.2.1.Drain PM-60
2.16.2.2.Fill PM-61
2.16.3. Power Steering Fluid PM-61
2.17. 48,000 Miles (77,200 km) Preventive Maintenance PM-62
2.17.1. Front End Alignment PM-62
2.17.2. Front & Rear Brake Chambers PM-62
2.17.2.1.Front Brake Chambers PM-62
2.17.2.2.Rear Brake Chambers PM-63
2.18. 54,000 Miles (87,000 km) Preventive Maintenance PM-64
2.18.1. Rear Axle Oil Change PM-64
2.19. 60,000 Miles (96,000 km) Preventive Maintenance PM-64
2.19.1. Fuel Tank PM-64
2.19.2. Air Compressor Discharge Lines PM-64
2.19.3. Crankcase Breather Element PM-64
2.19.3.1.Removal PM-64
2.19.3.2.Inspection & Cleaning PM-65
2.19.3.3.Installation PM-65
2.20. 75,000 Miles (120,700 km) Preventive Maintenance PM-65
2.20.1. Transmission Filters PM-65
2.21. 96,000 Miles (154,500 km) Preventive Maintenance PM-65
2.21.1. Front End Alignment PM-65
2.22. 150,000 Miles (241,400 km) Preventive Maintenance PM-66
2.22.1. Transmission Fluid PM-66
2.23. 200,000 Miles (321,000 km) Preventive Maintenance PM-67
2.23.1. Muffler Particulate Filter PM-67
2.23.2. Diesel Exhaust Fluid Filter PM-68
2.23.2.1. Removal PM-68
2.23.2.2.Cleaning & Inspection PM-68

The New Flyer vehicles described in this manual may be protected by one or more patents and design applications or registrations in the United States and Canada, and in other countries. Refer to "Vehicle Patent Information" in this manual.
Copyright © 2014 New Flyer Industries Canada ULC

2.23.2.3.Installation PM-69
2.24. Six Month Preventive Maintenance PM-70
2.24.1. D-2 Governor PM-70
2.24.2. PR-2 Pressure Protection Valve PM-70
2.24.3. ST-1 Safety Valve PM-70
2.24.4. SR-7 Spring Brake Modulating Valve PM-70
2.24.4.1.Operating Test PM-70
2.24.4.2.Leakage Test PM-70
2.24.5. DC-4 Double Check Valve PM-71
2.24.6. RV-3 Pressure Reducing Valve PM-71
2.24.7. R-14 Brake Relay Valve PM-71
2.24.8. Brake Foot Valve PM-71
2.24.9. Steering Knuckle PM-71
2.24.10.Power Steering Miter Box PM-72
2.25. Yearly Preventive Maintenance PM-73
2.25.1. Door Sensitive Edge Inspection & Test PM-73
2.25.2. Fuel Hoses PM-73
2.25.3. Wheelchair Ramp Pump PM-73
2.25.3.1. Hydraulic Fluid PM-73
2.25.3.2.Screen & Filter Inspection PM-74
2.25.4. Instrument Panel & Side Console PM-75
2.25.5. Fire Extinguisher PM-75
2.25.6. Air Dryer PM-75
2.25.7. QR-1 Quick Release Valve PM-76
2.25.8. Air Strainer PM-76
2.25.9. Radiator PM-76
2.25.10.Headlight Aim PM-76
2.26. Two Year Preventive Maintenance PM-77
2.26.1. Cooling System PM-77
2.26.1.1.Coolant PM-77
2.26.1.2.Radiator External Cleaning PM-77
2.26.2. Alternator Bearing Replacement PM-77
2.26.3. Door System Inspection PM-78
2.26.3.1.Connecting Rods & Rod End Bearings PM-78
2.26.3.2.Door Shaft Levers & Mounting Hardware PM-79
2.26.3.3.Upper Door Shaft Pivot Bearings PM-79
2.26.3.4.Lower Door Shaft Pivot Bearing PM-79
2.26.3.5.Upper Roller Guide, Brackets, & Bearings PM-79
2.26.3.6.Entrance Door Shaft & Arm Assembly PM-80
2.26.3.7.Exit Door Shaft & Arm Assembly PM-81
2.26.3.8.Door Panels PM-82
2.26.3.9.Door Panel Top & Bottom Seal Assemblies PM-82
2.26.3.10.Door Operator Limit Switches PM-82
2.26.3.11.Solenoid Valves PM-82
2.26.3.12.Driver's Door Controller PM-82
2.27. Three Year Preventive Maintenance PM-83
2.27.1. Under Body Inspection PM-83
2.28. Five Year Preventive Maintenance PM-83
2.28.1. Door Motor Rebuild PM-83

The New Flyer vehicles described in this manual may be protected by one or more patents and design applications or registrations in the United States and Canada, and in other countries. Refer to "Vehicle Patent Information" in this manual
Copyright © 2014 New Flyer Industries Canada ULC

2.28.2. Door Component Replacement PM-83
2.29. Six Year Preventive Maintenance PM-83
2.29.1. Fire Extinguisher PM-83
2.30. Ten Year Preventive Maintenance PM-84
2.30.1. Door Component Replacement PM-84
2.31. Twelve Year Preventive Maintenance PM-84
2.31.1. Fire Extinguisher PM-84
2.32. Fluid & Lubrication Points PM-85
2.33. Fluid & Lubrication Guide PM-86
2.33.1. MAN Axle Approved Mineral Oils PM-90
2.33.2. MAN Axle Approved Greases PM-90

The New Flyer vehicles described in this manual may be protected by one or more patents and design applications or registrations in the United States and Canada, and in other countries. Refer to "Vehicle Patent Information" in this manual.
Copyright © 2014 New Flyer Industries Canada ULC

The New Flyer vehicles described in this manual may be protected by one or more patents and design applications or registrations in the United States and Canada, and in other countries. Refer to "Vehicle Patent Information" in this manual.
Copyright © 2014 New Flyer Industries Canada ULC

1. SAFETY

1.1. Safety Procedures

This section of the service manual contains procedures which require the mechanics to strictly observe safety procedures in order to ensure personal and equipment safety.

Always ensure that the vehicle is appropriately hoisted and blocked for procedures which require elevating the vehicle. Be aware of the limitations of the blocking equipment, and always ensure that the jarring and shaking created by component removal and installation procedures does not overload the blocks, or cause the vehicle to become unstable.

Certain procedures may require the vehicle be operated in an elevated position in order to accurately troubleshoot and diagnose a problem. If the vehicle must be running while elevated, become familiar with the repair area prior to starting the engine. Take special care in noting areas which will become hot, electrically energized, and areas where moving and rotating components are located. Limit the work in these areas as personal and equipment safety is at risk.

For procedures which involve air lines, ensure the line is safely depressurized prior to disconnecting. Disconnecting pressurized lines will cause solid particles deposited in the line to be uncontrollably propelled, and will also cause the hose end to whip randomly as the air escapes.

During electrical diagnosis procedures an understanding of the vehicle's electric circuits is important to anticipate the results of connecting test equipment. During component removal or installation, ensure the Battery Disconnect switch is in the OFF position.

Failure to follow this procedure may result in personal injury or component failure.

Observe the following procedures involving hydraulic line removal.

- ❒ Hydraulic fluid is corrosive and should not be exposed to skin for extensive periods of time.
- ❒ Wear eye protection at all times.
- ❒ Pressurized lines should not be disconnected until the pressure is safely and controllably released.

⚠CAUTION

Follow all proper safety precautions regarding spray painting. Use a filtering mask with the proper filter cartridges for this type of paint. Wear eye protection and proper protective clothing. The paint booth or work area must be properly ventilated, with filtered exhaust fans removing fumes and over spray. Air make-up induction fans should also be used to supply fresh air to the work area. The painting area should be a safe distance from any source of flame, spark or other means of combustion. Atomized paint, thinner, cleaner and solvent fumes are highly volatile with an extremely low flashpoint that can cause explosive combustion. DO NOT smoke or permit anyone else to smoke in or near the painting area.

1.2. Insulation Foam Safety

⚠WARNING

Insulation foam is installed in the spaces of the frame tubing, between the vehicle inner and outer wall panels. The insulation Foam is extremely combustible. KEEP OPEN FLAMES AND FLAME SOURCES AWAY FROM THE INSULATION FOAM!

Before performing any work or repairs requiring use of an open flame such as: welding, brazing, acetylene torch cutting or grinding, ensure that the Insulation Foam is either removed from the area being repaired, or is properly shielded from the open flame.

The New Flyer vehicles described in this manual may be protected by one or more patents and design applications or registrations in the United States and Canada, and in other countries. Refer to "Vehicle Patent Information" in this manual.
Copyright © 2014 New Flyer Industries Canada ULC

2. PREVENTIVE MAINTENANCE

2.1. Introduction

The transit authority is responsible for the performance of all scheduled maintenance as outlined in this preventive maintenance manual to maintain the New Flyer vehicle warranty. New Flyer reserves the right to deny warranty coverage on claims due to lack of maintenance, misuse, abuse or neglect.

The maintenance intervals indicated in this manual are based upon average vehicle use and typical operating conditions. Unusual vehicle operating conditions, such as geographic environmental conditions, will require service at more frequent intervals. It is the customer's responsibility based upon experience with localized environmental conditions and local regulations to determine if more frequent intervals are required. If you are unsure, please contact your New Flyer Customer Service Technical Support representative.

All the described maintenance operations must be performed by qualified personnel using standard shop practices. All replacement parts used for maintenance services or repairs must be OEM parts or parts with equivalent quality and performance. Use of inferior parts will void the warranty. Warranty claims in question must be supported by preventive maintenance records.

Consumable maintenance items such as (but not limited to) lights, light bulbs, lamps, belts, bushings, and items with progressive wear characteristics, lubricants, fluids, filters, hoses, wiper blades and tires are not covered by warranty.

Refer to the illustrations included with this section as a guide to location of servicing points.

For compliance to warranties covering the following equipment, refer to complete preventive maintenance intervals and procedures contained in the applicable vendor supplied information:

- ☐ Engine
- ☐ Transmission
- ☐ HVAC Unit

2.2. Rear Axle Operating Conditions

The rear axle oil change interval is determined by operating conditions that affect the temperature of the oil in the axle. The following criteria have been established to assess the severity of the conditions under which the axle will be operated:

- ☐ Moderate Region - this description will apply to all regions where the average monthly temperature does not exceed 25°C (77°F) for more than two months of the year.
- ☐ Hot Region - this description will apply to all regions where the average monthly temperature exceeds 25°C (77°F) for more than two months of the year.

The New Flyer vehicles described in this manual may be protected by one or more patents and design applications or registrations in the United States and Canada, and in other countries. Refer to "Vehicle Patent Information" in this manual.
Copyright © 2014 New Flyer Industries Canada ULC

2.3. Run-In Maintenance

Certain procedures described in this section are designed to ensure a smooth vehicle run-in process. Perform the following procedures as part of vehicle run-in. Thereafter, Refer to 2.5. "Preventive Maintenance Guide" on page 4 in this section for regularly scheduled maintenance intervals on this equipment.

- ☐ Wheels - Check wheel torque upon receipt of vehicle. Refer to Section 1 and 2 of this manual for torque specifications and sequence.
- ☐ Driveshaft - Lubricate upon receipt of vehicle. Refer to 2.9.4. "Driveshaft" on page 15 in this section for lubrication procedure.
- ☐ Rear Axle - Change oil upon receipt of vehicle, Check oil level after first 3,000 miles (4,800 km). Refer to Section 2 of this manual for oil drain and fill procedure. Refer to 2.33. "Fluid & Lubrication Guide" on page 86 in this section for fluid specification.

2.4. Conditional Maintenance

The following items are subject to maintenance on a conditional basis and do not have a specific interval assigned against the maintenance requirement:

- ☐ Rear Axle Oil Filter - Replace the rear axle oil filter whenever the differential is removed from the axle housing. Refer to Section 2 of this manual for replacement procedure.
- ☐ Rear Axle Wheel Bearings - Repack wheel bearings and hub cavity with grease whenever the wheel bearings or grease seals are being serviced. Refer to 2.33. "Fluid & Lubrication Guide" on page 86 in this section for grease specification. Refer to Section 2 of this manual for grease repacking procedure.

The New Flyer vehicles described in this manual may be protected by one or more patents and design applications or registrations in the United States and Canada, and in other countries. Refer to "Vehicle Patent Information" in this manual.
Copyright © 2014 New Flyer Industries Canada ULC

2.5. Preventive Maintenance Guide

INTERVALS (Daily - 6,000 mi.)			
DAILY	**WEEKLY**	**MONTHLY**	**6,000 mi. (9,600 km)**
Exterior Check	Radiator	Bike Rack General Maintenance Inspection	Disc Brake Pad Inspection
Operational Check		Air Tanks	Wheels & Tires Inspection
Wheelchair Ramp		Fire Extinguisher	Transmission Inspection
Wheelchair Tie-Down & Occupant Restraints			Driveshaft
Bike Rack Inspection			Steering System Inspection
Floor Covering			Steering Driveshafts
Crankcase Breather Tube			Steering Damper
Aftertreatment Exhaust Piping			Engine Oil & Filter Change
Air Intake Piping			Primary (Suction) Fuel Filter Replacement
			Secondary (Pressure) Fuel Filter Replacement
			Exhaust System
			Shock Absorber Inspection
			Ride Height
			Air Springs
			Front & Rear Axles & Suspension
			Radius Rods
			Air System Functional Tests
			Driver's Window
			Window Emergency Release System

The New Flyer vehicles described in this manual may be protected by one or more patents and design applications or registrations in the United States and Canada, and in other countries. Refer to "Vehicle Patent Information" in this manual.
Copyright © 2014 New Flyer Industries Canada ULC

INTERVALS (Daily - 6,000 mi.)			
DAILY	**WEEKLY**	**MONTHLY**	**6,000 mi. (9,600 km)**
			Interior & Exterior Access Doors
			Roof Vent/Hatch
			Splash Guards
			Windshield Wiper & Washer
			Passenger Seats
			Stanchions & Grab Rails
			Wheelchair Tie-Down & Occupant Restraints
			Interior Panels
			Exterior Panels
			Battery System
			Wheelchair Ramp Inspection
			Driver's Heater/ Defroster
			HVAC Return Air Filter
			HVAC Fresh Air Filter
			Rear Axle Breather Tube
			Engine Compartment Line Routing Inspection

The New Flyer vehicles described in this manual may be protected by one or more patents and design applications or registrations in the United States and Canada, and in other countries. Refer to "Vehicle Patent Information" in this manual.
Copyright © 2014 New Flyer Industries Canada ULC

INTERVALS (7,500 - 18,000 mi.)			
7,500 mi. (12,000 km)	**12,000 mi. (19,300 km)**	**15,000 mi. (24,000 km)**	**18,000 mi. (29,000 km)**
Air Filter Restriction Indicator Inspection	Driver's Heater/ Defroster	Cooling System	Engine Mounts
Air Filter Replacement		Cooling System Pressure Test	Power Steering Filter
Charge Air Cooler & Piping		Coolant Filter Replacement	

INTERVALS (24,000 - 36,000 mi.)		
24,000 mi. (38,600 km)	**30,000 mi. (48,000 km)**	**36,000 mi. (58,000 km)**
Air Dryer	Fuel Tank	Disc Brake Caliper Inspection
Adjustable Floor Pedal (AFP) System	Engine Drive Belts	Rear Axle Oil Change (Hot Region Only - see NOTE at the end of this chart)
		Power Steering Fluid

INTERVALS (48,000 - 60,000 mi.)		
48,000 mi. (77,200 km)	**54,000 mi, (87,000 km)**	**60,000 mi. (96,000 km)**
Front End Alignment	Rear Axle Oil Change (Moderate Region Only - see NOTE at the end of this chart)	Fuel Tank
Front & Rear Brake Chambers		Crankcase Breather Element
		Air Compressor Discharge Lines

INTERVALS (75,000 - 200,000 mi.)			
75,000 mi. (120,700 km)	**96,000 mi. (154,500 km)**	**150,000 mi. (241,400 km)**	**200,000 mi. (321,000 km)**
Transmission Filters	Front End Alignment	Transmission Fluid	Muffler Particulate Filter
			Diesel Exhaust Fluid Filter

The New Flyer vehicles described in this manual may be protected by one or more patents and design applications or registrations in the United States and Canada, and in other countries. Refer to "Vehicle Patent Information" in this manual.
Copyright © 2014 New Flyer Industries Canada ULC

INTERVALS (6 Months - 3 Years)			
6 MONTHS	**YEARLY**	**2 YEARS**	**3 YEARS**
D-2 Governor	Door Sensitive Edge Inspection & Test	Cooling System	Under Body Inspection
PR-2 Pressure Protection Valve	Fuel Hoses	Alternator Bearing Replacement	
ST-1 Safety Valve	Wheelchair Ramp Pump Hydraulic Fluid	Door System Inspection	
SR-7 Spring Brake Modulating Valve	Instrument Panel & Side Console		
DC-4 Double Check Valve	Fire Extinguisher		
RV-3 Pressure Reducing Valve	Air Dryer		
R-14 Brake Relay Valve	QR-1 Quick Release Valve		
Brake Foot Valve	Air Strainer		
Steering Knuckle	Radiator		
Power Steering Miter Box	Headlight Aim		

INTERVALS (5 - 12 Years)			
5 YEARS	**6 YEARS**	**10 YEARS**	**12 YEARS**
Door Motor Rebuild	Fire Extinguisher	Door Component Replacement	Fire Extinguisher
Door Component Replacement			

☞NOTE:

Moderate regions are defined as geographic locations where the average monthly temperature does not exceed 25°C (77°F) for more than two months of the year.

Hot regions are defined as geographic locations where the average monthly temperature exceeds 25°C (77°F) for more than two months of the year.

The New Flyer vehicles described in this manual may be protected by one or more patents and design applications or registrations in the United States and Canada, and in other countries. Refer to "Vehicle Patent Information" in this manual.
Copyright © 2014 New Flyer Industries Canada ULC

2.6. Daily Preventive Maintenance

2.6.1. Exterior Check

- ❒ Wheels are undamaged and studs and nuts are secure.
- ❒ Tires correctly inflated.
- ❒ Vehicle is level.
- ❒ Exterior panels are undamaged.
- ❒ No fluid leaks exist under vehicle.
- ❒ No fluid leaks exist at axles.
- ❒ Surge tank coolant level is correct.
- ❒ Power steering reservoir level is correct.
- ❒ Engine and transmission fluid levels are correct.
- ❒ Fuel tanks are full.
- ❒ Diesel exhaust fluid tank is full.

2.6.2. Operational Check

Start the vehicle and check the following for correct condition and operation.

- ❒ Low air warning indicator and buzzer.
- ❒ Instrument panel indicators.
- ❒ Turn signals.
- ❒ Door control.
- ❒ Mirror condition and adjustment.
- ❒ Window and windshield visibility.
- ❒ Windshield wipers and washer.
- ❒ Destination signs.
- ❒ Front and rear doors.
- ❒ Exit door sensitive edge.
- ❒ Wheelchair ramp.
- ❒ Interior and exterior lights.
- ❒ Steering column.
- ❒ Door master switch.
- ❒ Headlights.
- ❒ Door manual air release valve.
- ❒ Passenger signals.
- ❒ Instrument panel gauges.
- ❒ Brake pedal.
- ❒ Parking brake.
- ❒ Accelerator.
- ❒ Transmission shift selector.
- ❒ Air system charges to 125 psi within 5 minutes if system is fully depleted.

☞NOTE:

If any of these systems do not operate correctly, or if a fault indicator illuminates, DO NOT drive the vehicle. Refer to Section 19 of this manual for details on the correct operation of all vehicle controls.

The New Flyer vehicles described in this manual may be protected by one or more patents and design applications or registrations in the United States and Canada, and in other countries. Refer to "Vehicle Patent Information" in this manual.
Copyright © 2014 New Flyer Industries Canada ULC

2.6.3. Wheelchair Ramp

Inspect the wheelchair ramp area for cleanliness on a regular basis depending on operating conditions. Exposure to salt, sand, or slush during the winter months may require inspection on a daily basis. Likewise, operating in gritty, dusty conditions during the summer months will require more frequent inspections. Clean any dirt or foreign matter from the ramp, hinge, and operating shaft areas. Inspect the recessed area between the floor and ramp for any accumulation of debris. Manually deploy and stow the ramp to check for smooth operation. Inspect hinge for binding or distortion. Repair or replace hinge as necessary.

2.6.4. Wheelchair Tie-Down & Occupant Restraints

⚠WARNING

If the vehicle was involved in an impact situation, significant enough to have the vehicle towed, then the wheelchair tie-downs, occupant restraints, and anchorages that were in use at the time should be replaced.

The following items should be inspected on a daily basis:

- ☐ Check belt retractor mechanism by extending and releasing belt. Ensure belt retractor operates as designed and functions smoothly.
- ☐ Inspect belts to ensure webbing is not cut, frayed, damaged, or contaminated by polishes, oils, or chemicals.
- ☐ Operate buckles and any locking or release mechanisms. Ensure mechanisms operate smoothly and release completely.
- ☐ Ensure all floor anchors are secure and free of obstructions, debris and dirt. Tighten mounting hardware as required.

☞NOTE:

If any mounting hardware requires tightening or adjustment, the fastener must be removed to have the threads cleaned and Loctite 243 reapplied/

- ☐ Ensure all wall anchors for belts are properly secured and allow proper freedom of movement.
- ☐ Ensure floor surface in wheelchair restraint area is undamaged and free of any condition which would impede use of equipment.
- ☐ Ensure the belts are kept clean and recoiled within the retractor when not in use.
- ☐ Ensure all labels detailing use of restraint equipment are undamaged and clearly legible.

2.6.5. Bike Rack Inspection

Inspect the bike rack on a daily basis as follows:

- ☐ Check for presence of bolts that secure support arms to frame (two places). Replace missing bolts as required.
- ☐ Ensure that the stow latches (two places) are installed. These latches stow the hook arms. Replace missing stow latches as required.
- ☐ Ensure that the support arms slide in and out smoothly and self stows on latches.
- ☐ Ensure that the latch handle engages and releases easily without binding.
- ☐ Check the wheel stop screws (5/16" - 18 Phillips screws) are properly tightened.
- ☐ Ensure that the rack pivots freely and locks in both the deployed and stowed positions.

The New Flyer vehicles described in this manual may be protected by one or more patents and design applications or registrations in the United States and Canada, and in other countries. Refer to "Vehicle Patent Information" in this manual.
Copyright © 2014 New Flyer Industries Canada ULC

2.6.6. Floor Covering

⚠CAUTION

DO NOT clean the vehicle interior with pressure washing equipment. This type of cleaning causes excessive soaking of the floor covering and can result in separation of the rubber floor covering from the floor substrate, warping or deterioration of the floor substrate, and possible damage to floor mounted equipment such as floor heaters.

Inspect the interior flooring for cleanliness on a regular basis depending on operating conditions. Exposure to salt, sand, or slush during the winter months may require inspection on a daily basis.

- ☐ Vacuum or sweep the floor area daily to remove surface soil before it becomes embedded in the rubber floor covering.
- ☐ Wash the floor using a mild detergent and a minimum amount of water to avoid soaking seams and edge areas.
- ☐ Visually inspect rubber flooring for gouges, cracks, seam separation, lifting, or any other damage. Refer to Section 12 of this manual for floor covering repair procedures.

⚠CAUTION

Damaged rubber flooring covering must be repaired immediately to prevent water intrusion and subsequent damage to the wood flooring.

2.6.7. Crankcase Breather Tube

Check breather tube for kinks, dents, or other damage. Also check inside of tube for sludge, debris, or ice formation (in freezing conditions). Clean or replace tube as required

2.6.8. Aftertreatment Exhaust Piping

Inspect exhaust aftertreatment system for leaks cracks, and loose connections. Inspect for leaks at V-band connections and tighten clamps as necessary.

2.6.9. Air Intake Piping

Inspect air intake tubes and hoses, for evidence of wear, punctures, or other damage. Inspect for loose connections and tighten clamps as necessary.

2.7. Weekly Preventive Maintenance

2.7.1. Radiator

Test the function of the fan reverse switch and LED indicator on a weekly basis or any time service work is being performed in the engine compartment. Operating the fan reverse switch will not only clear debris from the radiator core, but will also confirm operation of the LED indicator which is used to display diagnostic fault codes. If any active fault codes are indicated, refer to Section 6 of this manual for troubleshooting and vendor information.

The New Flyer vehicles described in this manual may be protected by one or more patents and design applications or registrations in the United States and Canada, and in other countries. Refer to "Vehicle Patent Information" in this manual.
Copyright © 2014 New Flyer Industries Canada ULC

2.8. Monthly Preventive Maintenance

2.8.1. Bike Rack General Maintenance Inspection

Inspect the bike rack on a monthly basis as part of general maintenance. In addition to the general maintenance inspection, perform specific servicing and repairs resulting from the monthly general maintenance inspection. Refer to Section 13 of this manual for specific servicing and repair procedures.

- ☐ Ensure that the rack swings freely between stowed and deployed positions.
- ☐ Ensure that the release latch functions easily without binding in the release position.
- ☐ Ensure that the release latch locks securely in both the stowed and deployed positions.
- ☐ Ensure that the support arm hinge permits the support arm to raise and lower without binding.
- ☐ Ensure that the support arm stow latch properly mates with and holds the support arm grip.
- ☐ Ensure that each support arm grip pulls out smoothly to the end stop, and easily slides back to the stowed position and properly self stows on the stow latch when released. Do not lubricate stow latch.
- ☐ Check the pivot bolt assemblies to ensure they are tight.
- ☐ Check pivot bolt bronze oilite bushings for wear or cracks. Replace as necessary.
- ☐ Check that all mounting bracket fasteners are tight, including the hardware for the quadrant, pivot plate to bracket pieces, and bracket pieces to vehicle bumper/structure.
- ☐ Ensure that the instruction labels are intact and legible. Replace any damaged or illegible labels. Clean the bike rack surface with isopropyl alcohol before applying new label.
- ☐ Inspect stainless steel surfaces for evidence of surface rust. Use naval jelly to remove rust.

The New Flyer vehicles described in this manual may be protected by one or more patents and design applications or registrations in the United States and Canada, and in other countries. Refer to "Vehicle Patent Information" in this manual.
Copyright © 2014 New Flyer Industries Canada ULC

2.8.2. Air Tanks

It is recommended that all air tanks be drained monthly and a record of the contents collected be recorded. Performing these inspections on a regular basis will establish trend monitoring to assess the performance of the compressor (excessive oil passing) and air dyer (saturated desiccant cartridge).

The following factors can influence that amount of water collected and should be taken into consideration before making an assessment:

- ☐ An outside air source was used to charge the system and did not pass through the air dryer.
- ☐ Exceptionally high air usage, exceeding 25% compressor duty cycle due to either heavy accessory demand or system leakage
- ☐ Daily temperature range exceeds 30°F (17°C) resulting in condensation. Under these conditions the presence of small amounts of moisture is normal and should not be considered as an indication that the air dryer is not functioning properly.

☞NOTE:

A small amount of oil in the system is not unusual and should not be considered a reason to replace the desiccant cartridge. Oil stained desiccant can function adequately.

Perform the air tank drain and collection process as follows:

1. Obtain Bendix BASIC test kit P/N 5013711 or equivalent.
2. Park the vehicle on level ground and chock the wheels.
3. Place the collection cup at each drain valve and slowly drain the air tank. Repeat this process for all air tanks and collect total contents in a single collection cup.
4. Allow contents in collection cup to settle and assess whether fluid is primarily water, oil, or an emulsion.
5. Evaluate volume collected as follows:
   a. More than one unit of oil in a 30 day period will require the desiccant cartridges to be changed and is considered cause for further inspection of the air compressor. Worn pistons or rings will allow oil bypass and may require repair if amount of oil bypassed is excessive. Also inspect compressor discharge line for excessive carbon buildup.
   b. More than one unit of water or emulsion will be cause to conduct an air system leakage test. Refer to Section 8 of this manual for procedure.
   c. More than five units of water in a 30 day period indicates unsatisfactory air dryer performance. Replace air dryer desiccant cartridges.

2.8.3. Fire Extinguisher

Inspect the fire extinguisher every month as follows:

- ☐ Ensure the fire extinguisher is securely mounted in its proper location.
- ☐ Check that the safety pin lock is installed.
- ☐ Ensure that the hose is in good condition and the nozzle is not obstructed.
- ☐ Confirm that the cylinder pressure indicated on the gauge is within the green operating range.

The New Flyer vehicles described in this manual may be protected by one or more patents and design applications or registrations in the United States and Canada, and in other countries. Refer to "Vehicle Patent Information" in this manual.
Copyright © 2014 New Flyer Industries Canada ULC

2.9. 6,000 Miles (9,600 km) Preventive Maintenance

2.9.1. Disc Brake Pad Inspection

Visually check brake pad wear every 6,000 miles (9.600km) or every 3 months, whichever occurs first. Refer to "Brake Pad Wear Inspection" in Section 1 and 2 of this manual for inspection procedure.

2.9.2. Wheels & Tires Inspection

- ☐ Visually inspect front tires for unusual tread wear indicating wheels are out of alignment, suspension damage has occurred or tires are not properly inflated.
- ☐ Visually check front wheel rims and outside rear wheel rims are not bent, cracked or damaged.
- ☐ Check tires are same make, model and size.
- ☐ Check wheels are balanced.
- ☐ Check wheel nuts are tightened to the specified torques. Refer to Section 1 and Section 2 of this manual for specifications.

The New Flyer vehicles described in this manual may be protected by one or more patents and design applications or registrations in the United States and Canada, and in other countries. Refer to "Vehicle Patent Information" in this manual.
Copyright © 2014 New Flyer Industries Canada ULC

2.9.3. Transmission Inspection

Every 6,000 miles (9,600 km) inspect the transmission for the following conditions:

- ❒ Loose bolts (transmission to engine attachment and driveline components).
- ❒ Oil leaks (correct immediately).
- ❒ Worn or frayed electrical harnesses, improper routing. See "Fig. PM-1: Transmission Inspection" on page 14.
- ❒ Damaged or loose oil lines.
- ❒ Worn or out-of-phase driveline yokes and slip joints.
- ❒ Clogged or dirty breather. Replace as required.
- ❒ Transmission fluid that is discolored, has a strong odor, or has exceeded oil analysis limits.
- ❒ Presence of engine coolant in the transmission fluid.

☞NOTE:

Transmission overhaul is required when the transmission has been contaminated with engine coolant.

- ❒ Presence of transmission fluid in the engine cooling system.

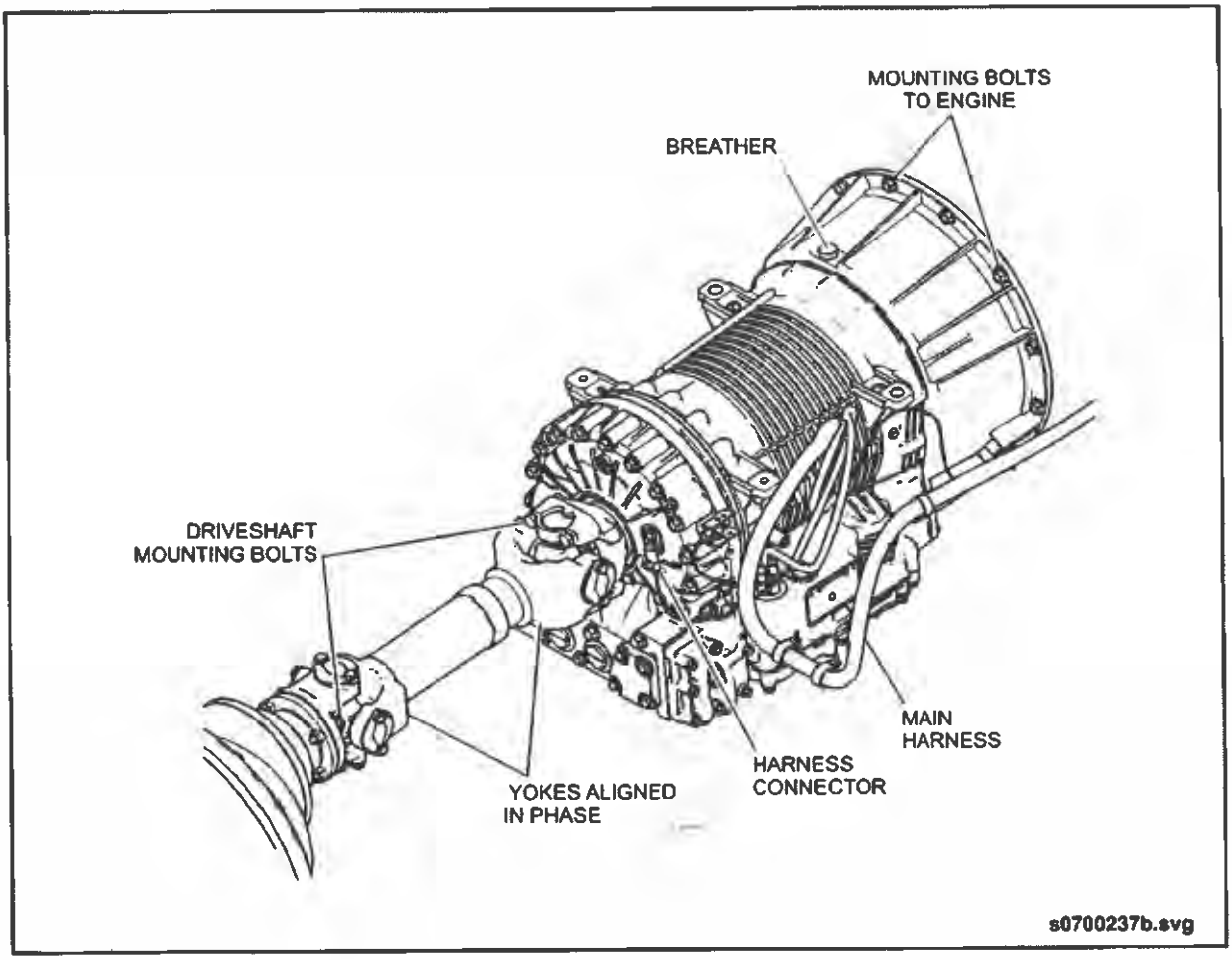

Fig. PM-1: Transmission Inspection

The New Flyer vehicles described in this manual may be protected by one or more patents and design applications or registrations in the United States and Canada, and in other countries. Refer to "Vehicle Patent Information" in this manual.
Copyright © 2014 New Flyer Industries Canada ULC

2.9.4. Driveshaft

☞NOTE:

For initial run-in period, lubricate driveshaft upon receipt of vehicle. Thereafter, lubricate every 6,000 miles (9,600 km).

2.9.4.1. Inspection

Inspect the driveshaft as follows:

⚠WARNING

ALWAYS replace fasteners with new OEM parts. DO NOT reuse bolts, bearing strap, or locking plate.

- ☐ Check for a bent tube, evidence of missing balance weights, or other damage. Remove any buildup of foreign material on the shaft.
- ☐ Check that the lugs (ears) of the yokes on the slip yoke are aligned in the same plane (in phase) with the lugs (ears) of the tube yoke. Disassemble and realign shafts if not found to be in phase.
- ☐ Visually inspect the torque witness marks on the driveshaft fasteners. If the marks are illegible or misaligned, replace the fasteners with new OEM fasteners, torque to specification, and apply torque witness mark. Refer to Section 2 of this manual for torque procedure and specifications.
- ☐ Inspect locking plate tabs to ensure they are properly bent up and securing the hex bolts on the bearing cups.
- ☐ Check the output shaft of the transmission and the pinion shaft of the drive axle for excessive radial movement.
- ☐ Check for play in the universal joint by inserting a pry bar against the yoke and prying against the universal joint. Any lateral or sideways movement of u-joint cross within the bearing cap exceeding 0.006 inch is cause for rejection.
- ☐ Check for spline wear by manually applying a push/pull force to the tube shaft at the juncture of slip spline. Excessive movement will necessitate disassembly and further inspection of the driveshaft to determine cause.
- ☐ Inspect driveshaft guard to ensure it is undamaged and securely mounted.
- ☐ Inspect driveshaft access door from interior of vehicle to ensure that it is securely latched.

The New Flyer vehicles described in this manual may be protected by one or more patents and design applications or registrations in the United States and Canada, and in other countries. Refer to "Vehicle Patent Information" in this manual.
Copyright © 2014 New Flyer Industries Canada ULC

2.9.4.2. Lubrication

Refer to 2.33. "Fluid & Lubrication Guide" on page 86 in this section for lubricant specification.

☞NOTE:

For initial run-in period, lubricate driveshaft upon receipt of vehicle and thereafter inspect and lubricate every 6,000 miles (9,600 km).

- ☐ Universal Joint - purge lubricate the universal joint by pumping grease into the u-joint grease fitting until grease emerges from the sealing lip. Do not exceed 5,000 psi grease pressure, otherwise the bearings will be over-pressurized. Refer to Fig. PM-2: "Driveshaft Lubrication Points" on page 16

⚠WARNING

DO NOT apply excessive amounts of grease or use high pressure application when lubricating the telescoping spline. Excessive grease can fill the lube cavity in the yoke end of the tube and could restrict length compensating travel.

- ☐ Telescoping Spline - apply no more than one ounce of grease at the grease fitting located on the spline shaft.

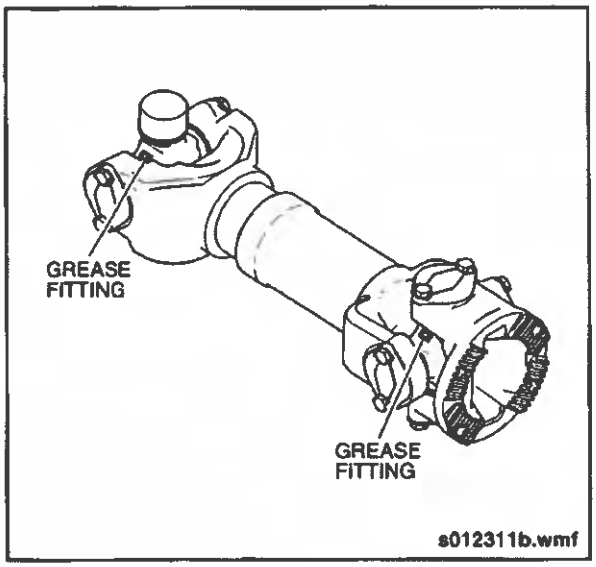

Fig. PM-2: Driveshaft Lubrication Points

2.9.5. Steering System Inspection

☞NOTE:

ALWAYS check wheel alignment following replacement of drag link, center link, or tie-rod ends or any steering components that were damaged.

- ☐ Visually inspect all steering components for any evidence of damage. See "Fig. PM-3: Steering Gear Inspection" on page 17.
- ☐ Inspect the steering gear driveshaft for worn u-joints or loose clamp nuts.
- ☐ Visually inspect steering gear pitman arm and ensure retaining nut is properly locked.
- ☐ Inspect the tie-rod ends on the drag link, steering idler arm, and center link for excessive play. Use a pry bar to lever the component and inspect for excessive movement. Refer to Section 3 of this manual for specific inspection procedures.

☞NOTE:

Excessive movement of the tie rod end typically indicates a worn ball socket and the tie-rod end will require replacement. However if movement is due to a loose fit of the tie-rod end tapered pin in the steering arm, do not attempt to re-tighten the castle nut. Remove the tie-rod end and inspect the bore of the steering arm for wear.

- ☐ Perform a visual torque inspection of all steering component fasteners, including the lock nut on the steering stop adjusting bolt. Ensure that the torque witness marks are in alignment. Any fastener that has illegible or missing witness marks should be re-torqued to specification. Refer to Section 3 of this manual for torque specifications.

☞NOTE:

If the witness marks are no longer aligned, it is an indication that the fastener has loosened and it will be necessary to replace the fastener, torque to specification, and reapply torque witness mark.

- ☐ Inspect steering gear, hydraulic pump, and hoses for evidence of leakage.

The New Flyer vehicles described in this manual may be protected by one or more patents and design applications or registrations in the United States and Canada, and in other countries. Refer to "Vehicle Patent Information" in this manual.
Copyright © 2014 New Flyer Industries Canada ULC

⚠CAUTION

ALWAYS wipe clean the area around the filler cap before removing to prevent contaminants from entering the system.

- ☐ Inspect hydraulic reservoir fluid level and condition. Replace fluid if dirt, sludge, or water is evident in the system.

☞NOTE:

If hydraulic fluid appears frothy it is likely that air is trapped in the system and needs to be bled. Refer to Section 3 of this manual for power steering bleeding procedure.

- ☐ Check for smooth operation while turning the steering system through a full left and full right turn, Ensure that the power steering gear relief valve activates before contacting steering stops. Refer to Section 3 of this manual if steering stop adjustment is required.

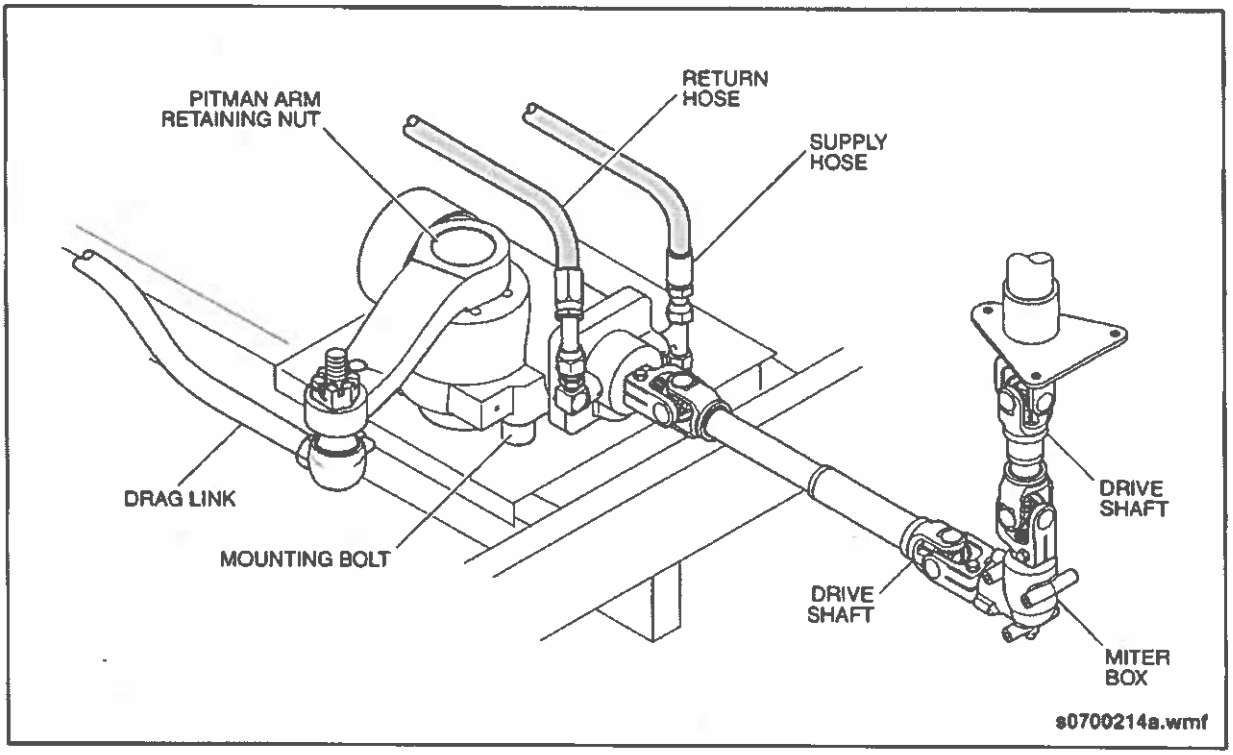

Fig. PM-3: Steering Gear Inspection

The New Flyer vehicles described in this manual may be protected by one or more patents and design applications or registrations in the United States and Canada, and in other countries. Refer to "Vehicle Patent Information" in this manual.
Copyright © 2014 New Flyer Industries Canada ULC

2.9.6. Steering Driveshafts

Inspect and lubricate the upper (vertical) and lower (horizontal) steering driveshafts every 6,000 miles (9,600 km). See "Fig. PM-4: Steering Driveshaft Inspection" on page 18.

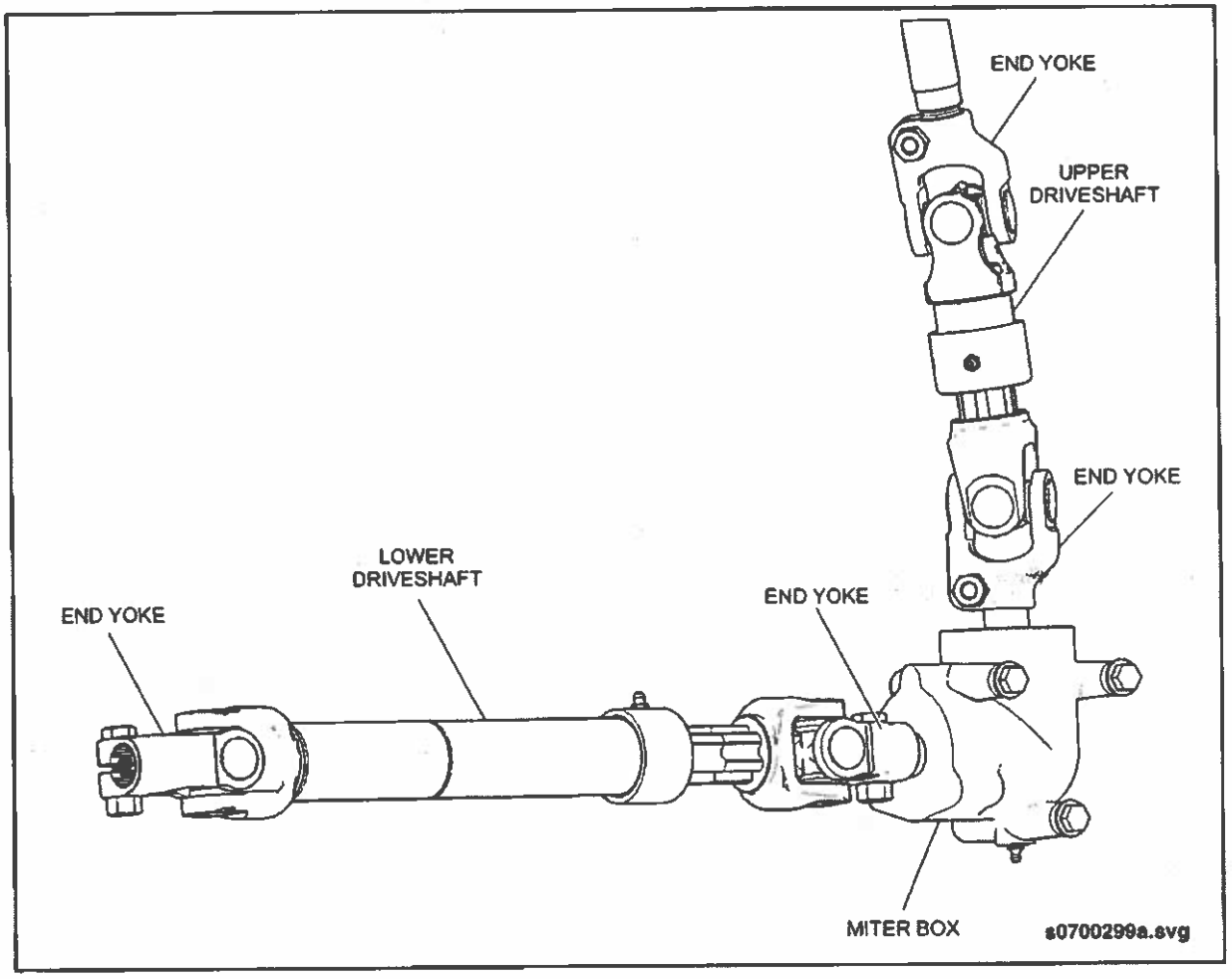

Fig. PM-4: Steering Driveshaft Inspection

The New Flyer vehicles described in this manual may be protected by one or more patents and design applications or registrations in the United States and Canada, and in other countries. Refer to "Vehicle Patent Information" in this manual.
Copyright © 2014 New Flyer Industries Canada ULC

2.9.6.1. Inspection

The steering driveshaft will exhibit a certain amount of movement when rotated or forced side to side and can be attributed mostly to U-joint movement. The following inspection provides procedures and allowable limits specific to each area of the steering driveshaft. Do not reject the steering driveshaft for overall play unless one or more of the following inspection points exceeds maximum allowable limits.

1. Visually inspect the steering driveshafts for any evidence of damage.
2. Visually check torque witness marks on clamp fasteners.
3. Inspect the U-joints to ensure that all snap rings are installed and fully seated within the groove on the bearing cup. The bearing cup must not protrude any more than 0.105" beyond the surface of the yoke bore. See "Fig. PM-5: Snap Ring Inspection" on page 20.
4. Inspect the U-joint cross for end play movement within the bearing cups:
   a. Restrain the end yoke from moving and apply lateral side to side force on each U-joint. Note the total back and forth movement of the U-joint cross within the bearing cups. Maximum allowable end play is 0.012" (0.30 mm). km). See "Fig. PM-6: Steering Driveshaft U-Joint Inspection" on page 20.
   b. Repeat the previous step on the same U-joint except apply pressure 90° from previous location.

☞NOTE:

If any of the above readings are suspect, remove the steering driveshaft from the vehicle and clamp the yoke in a vise and measure movement with a dial indicator to confirm.

5. Inspect the U-joint for worn needle bearings and/or cross trunnions:
   a. Apply back and forth rotational force to the yokes on the U-joint and note any relative movement between the U-joint cross and the bearing cups.
   b. No perceptible movement is allowed. Replace steering driveshaft as an assembly.

☞NOTE:

U-joints are not field replaceable, but may be serviced by the manufacturer. Contact Prop Shaft Supply in Elkhorn, Wisconsin for further information on driveshaft overhaul.

6. Inspect the steering driveshaft end yokes for excessive play:
   a. Apply lateral side to side force on each end yoke and note the deflection in the area where the end yoke splines are clamped to the attaching component. See "Fig. PM-7: Steering Driveshaft End Yoke Inspection" on page 20.
   b. Spline movement should be minimal. If the amount of spline movement is questionable, remove the steering driveshaft for closer inspection of the splines as well as the male splines on the attaching component.
7. Check for excessive movement or backlash in the telescoping slip-joint:
   a. Grasp the male and female members of the telescoping slip-joint and apply a back and forth twisting motion while observing or feeling for movement. See "Fig. PM-8: Steering Driveshaft Spline Backlash Inspection" on page 20.
   b. Spline movement should be minimal. If the amount of spline movement is questionable, remove the steering driveshaft for closer inspection of the telescoping splines.
8. If telescoping slip-joint is disassembled, check the nylon coating on the splines for wear, cuts, gouges, or any other damage.
9. If damage is evident, the nylon coating must be stripped from the splines and reapplied. Contact Prop Shaft Supply in Elkhorn, Wisconsin for further information on driveshaft overhaul.

The New Flyer vehicles described in this manual may be protected by one or more patents and design applications or registrations in the United States and Canada, and in other countries. Refer to "Vehicle Patent Information" in this manual.
Copyright © 2014 New Flyer Industries Canada ULC

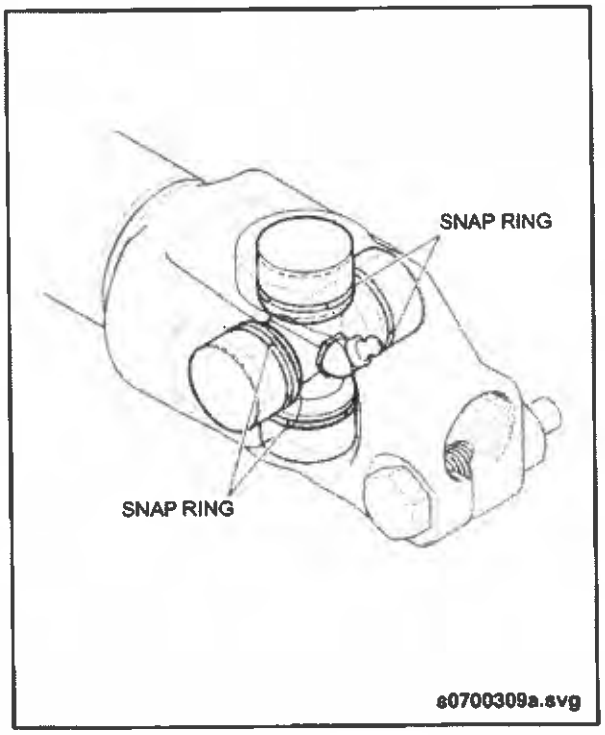

Fig. PM-5: Snap Ring Inspection

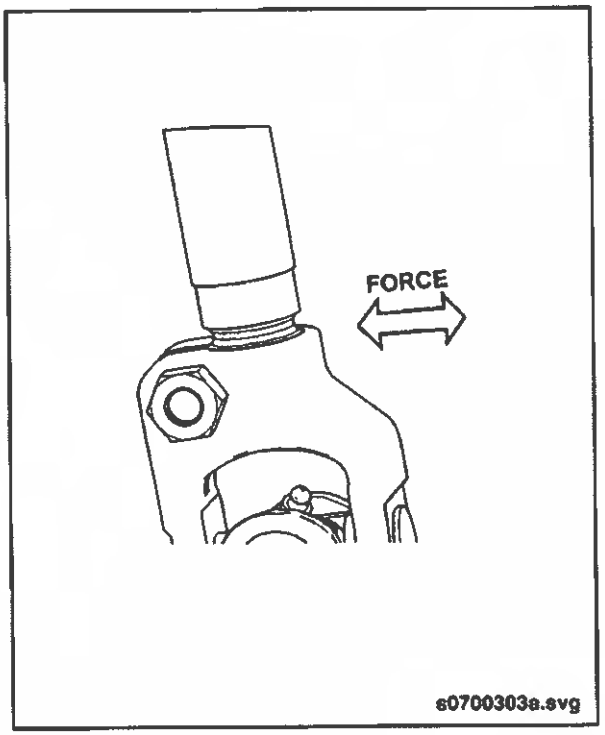

Fig. PM-7: Steering Driveshaft End Yoke Inspection

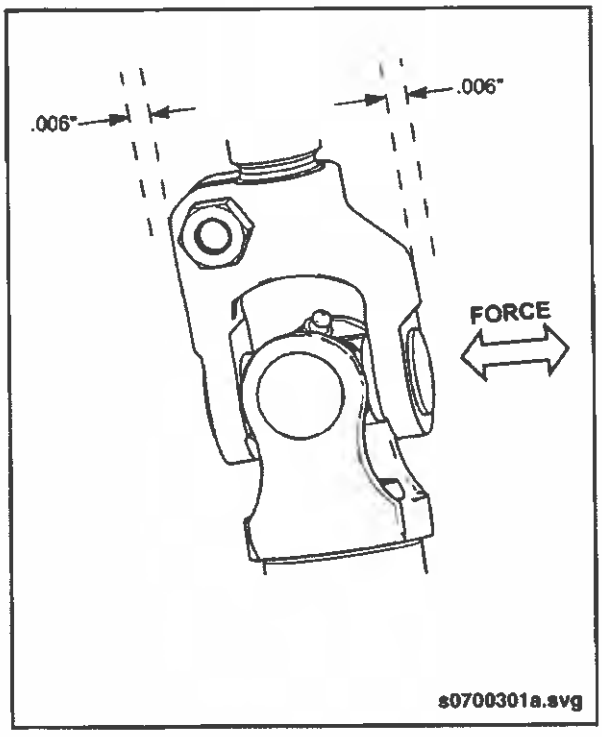

Fig. PM-6: Steering Driveshaft U-Joint Inspection

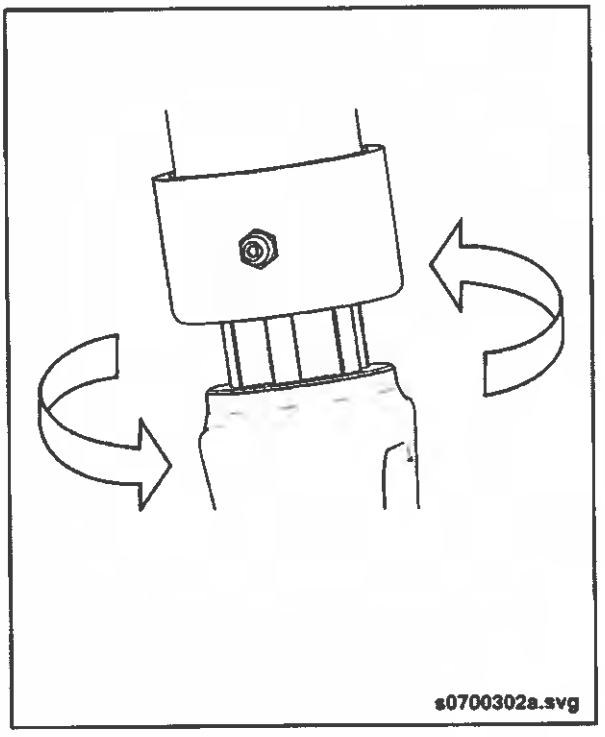

Fig. PM-8: Steering Driveshaft Spline Backlash Inspection

The New Flyer vehicles described in this manual may be protected by one or more patents and design applications or registrations in the United States and Canada, and in other countries. Refer to "Vehicle Patent Information" in this manual.
Copyright © 2014 New Flyer Industries Canada ULC

2.9.6.2. Universal Joint Lubrication

1. Locate the grease fittings on the universal joints at both ends of the driveshaft.
2. Purge lubricate through the grease fittings until fresh grease flows out of all four bearing cup seals. Refer to 2.33. "Fluid & Lubrication Guide" on page 86 in this section for grease specifications. See "Fig. PM-9: Steering Driveshaft Lubrication Points" on page 21.
3. If all four bearing cups do not purge lubricate successfully, then it will be necessary to remove the steering driveshaft from the vehicle and tap the opposite cap or rotate the adjacent yoke through its full range of motion while applying grease.
4. Wipe off excess grease from universal joint.

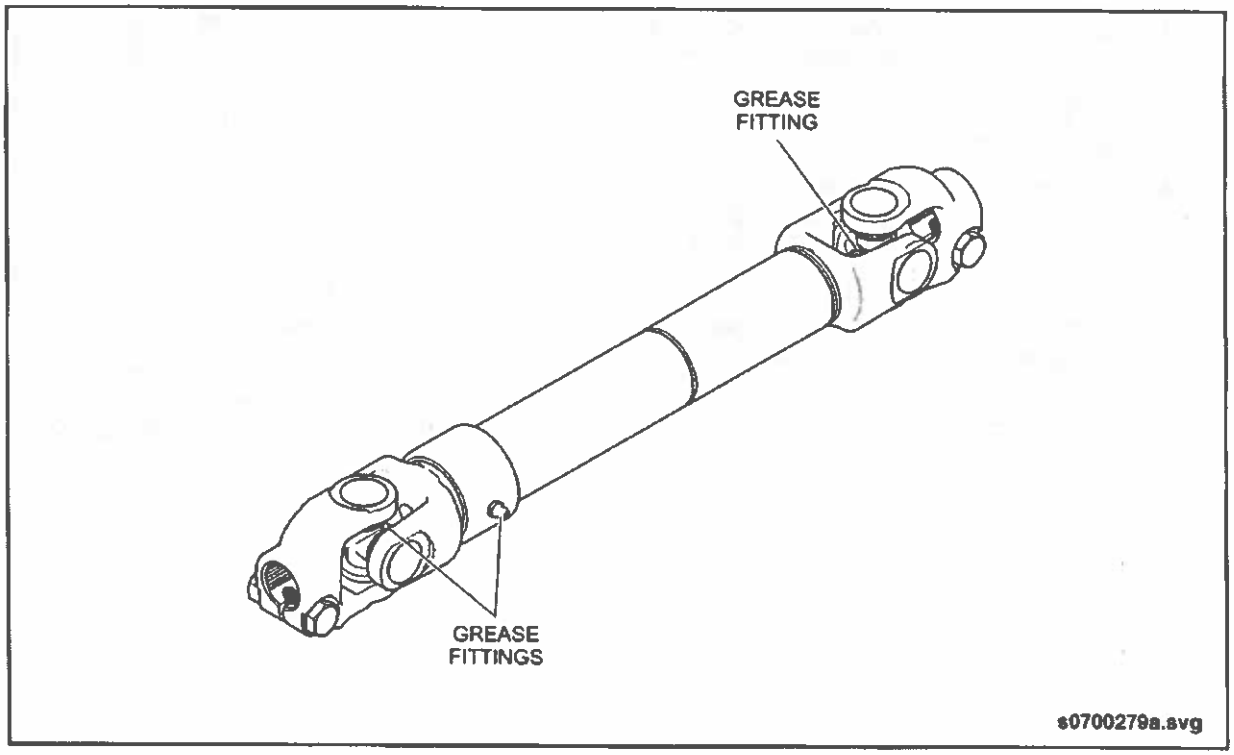

Fig. PM-9: Steering Driveshaft Lubrication Points

The New Flyer vehicles described in this manual may be protected by one or more patents and design applications or registrations in the United States and Canada, and in other countries. Refer to "Vehicle Patent Information" in this manual.
Copyright © 2014 New Flyer Industries Canada ULC

2.9.6.3. Telescoping Spline Lubrication

1. Remove the clamping bolt on one end of the steering driveshaft and compress the shaft completely.
2. Locate the grease fitting on the driveshaft slip sleeve and apply grease with 8 to 10 hand pumps.
3. Fully extend and compress shaft a few times to ensure grease is applied to full length of spline.
4. Completely remove yoke shaft and check the seal of the dust cap. Grease must completely fill between both lips of the seal. See "Fig. PM-10: Steering Driveshaft Seal Inspection" on page 22.
5. If dust cap seal is not completely greased, return the yoke shaft to the compressed position and repeat greasing procedure.

☞NOTE:

Ensure the driveshaft is properly reassembled with alignment arrows facing each other. This will ensure the driveshaft remains in phase.

6. Wipe off excess grease from the slip spline.

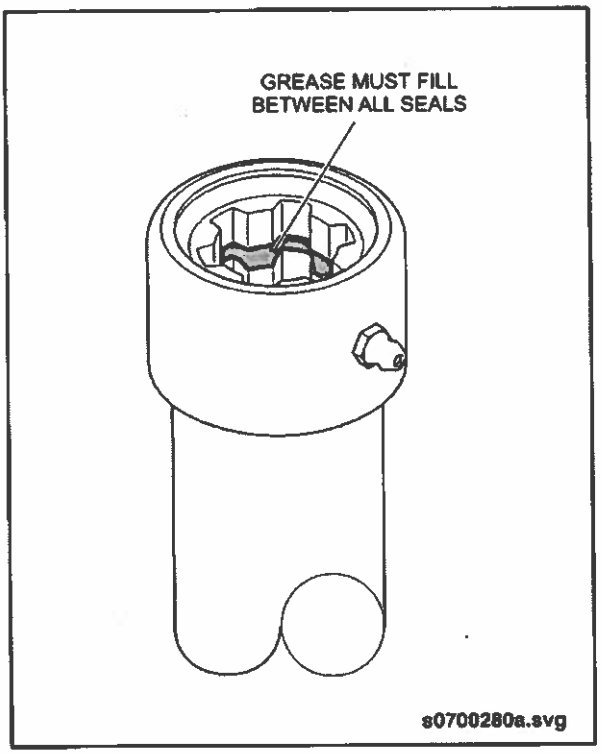

Fig. PM-10: Steering Driveshaft Seal Inspection

The New Flyer vehicles described in this manual may be protected by one or more patents and design applications or registrations in the United States and Canada, and in other countries. Refer to "Vehicle Patent Information" in this manual.
Copyright © 2014 New Flyer Industries Canada ULC

2.9.7. Steering Damper

Inspect the steering damper every 6,000 miles (9,600 km) as follows:

- ☐ Check for excessive play at ball joints ends. See "Fig. PM-11: Steering Damper Inspection" on page 23.
- ☐ Inspect for any external damage to cylinder or piston rod. Replace damper if bent or damaged.
- ☐ Check for evidence of leakage. Replace damper if leaking.
- ☐ Inspect condition of protective sleeve on cylinder and ensure it can move freely and extend approximately 2 inches from cylinder.
- ☐ Inspect exterior surfaces for evidence of corrosion. Clean light surface rust, otherwise replace damper if badly corroded.

☞NOTE:

If maintenance records indicate that the vehicle is experiencing front end steering shimmy, then a cylinder damping inspection should be performed.

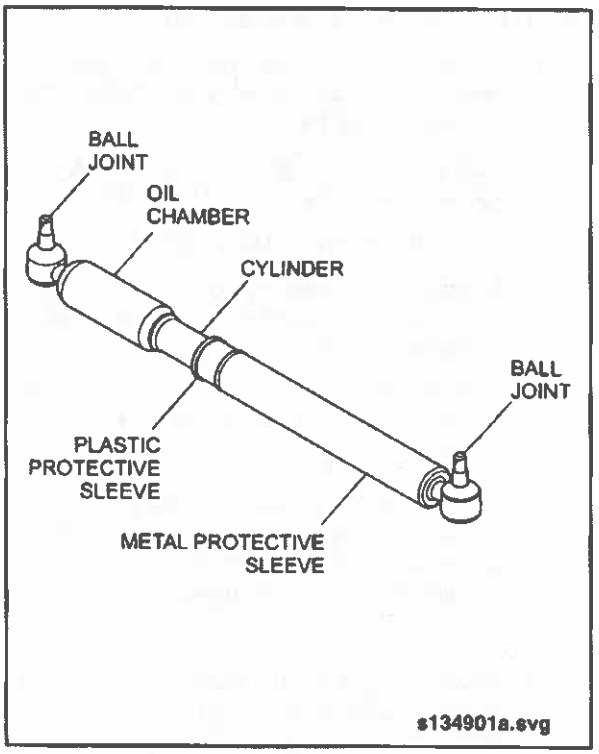

Fig. PM-11: Steering Damper Inspection

The New Flyer vehicles described in this manual may be protected by one or more patents and design applications or registrations in the United States and Canada, and in other countries. Refer to "Vehicle Patent Information" in this manual.
Copyright © 2014 New Flyer Industries Canada ULC

2.9.7.1. Cylinder Damping Inspection

1. Remove steering damper from vehicle. Refer to Section 3 of this manual for removal procedure.
2. Hold the steering damper in a vertical position with the oil chamber at the bottom.
3. Extend the piston rod fully by hand.
4. Operate the steering damper twice through its full range of travel in both compression and extension strokes.
5. Hold the steering damper fully extended in the vertical position for at least one minute.

   ☞NOTE:

   Ensure that no pressure is applied to the piston rod while it is in the extended vertical position. The plastic protective sleeve should also be in the fully extended position.

6. Slowly compress the piston rod into the cylinder while noting both the resistance and distance travelled. Stop compressing the piston once resistance is felt.
7. Mark the position of resistance by scribing a line on the plastic protective sleeve that coincides with the position of the metal protective sleeve.
8. Retract the piston upwards until the plastic protective sleeve is fully extended. Measure the distance between the edge of the metal protective sleeve and the mark scribed on the plastic protective sleeve. See "Fig. PM-12: Damper Measurement" on page 24.
9. The piston rod must not travel more than 0.118 in. (3.0 mm) before damping resistance is felt. Replace steering damper if free travel (slip) exceeds these limits.
10. Reinstall steering damper on vehicle. Refer to Section 3 of this manual for installation procedure.

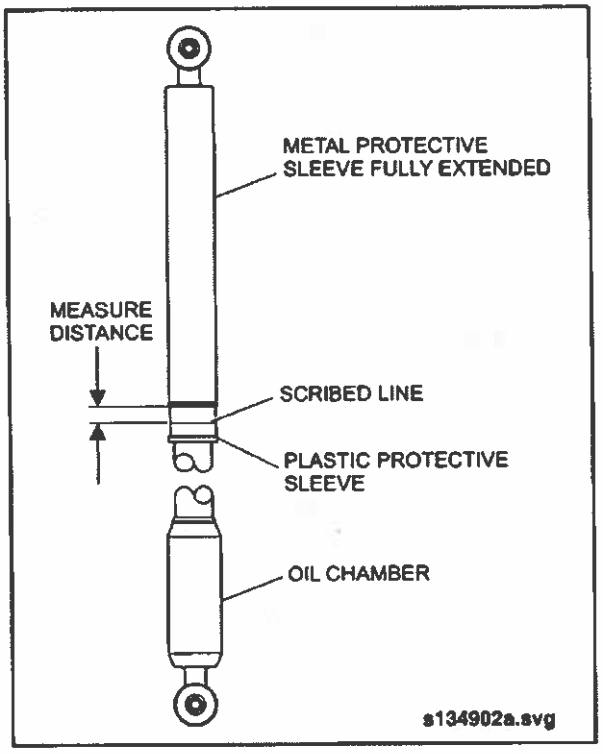

Fig. PM-12: Damper Measurement

The New Flyer vehicles described in this manual may be protected by one or more patents and design applications or registrations in the United States and Canada, and in other countries. Refer to "Vehicle Patent Information" in this manual.
Copyright © 2014 New Flyer Industries Canada ULC

2.9.8. Engine Oil & Filter Change

☞NOTE:

Engine oil and filter change intervals are based on average vehicle speed. Refer to 2.9.8.1. "Engine Oil Change Intervals" on page 26 *in this section and use whichever interval is the shortest. Oil may be blown out through the crankcase breather if the crankcase is overfilled.*

1. Run the engine until its operating temperatures reaches 140°F (60°C). Stop the engine.
2. Remove the oil drain plug from the bottom of the oil pan. See "Fig. PM-13: Engine Oil Filter" on page 25.
3. Allow the oil to drain into a suitable container.
4. Clean the area around the oil filter head. Remove the filter and clean the gasket area.

☞NOTE:

The gasket can stick to the filter head. Ensure it is removed.

5. Fill the replacement filter with clean engine oil. Apply a thin film of lubricating oil to the filter gasket and to the gasket sealing surface.
6. Install the filter on the engine. Follow the directions on the label for correct installation. Do not over-tighten.
7. Clean the engine oil pan drain plug threads. Install the drain plug. Torque the plug on installation 60 ft-lb. (81 Nm).
8. Fill the engine with new oil. Refer to 2.33. "Fluid & Lubrication Guide" on page 86 in this section for oil specification. Engine capacity is 25.2 quarts U.S. (23.8 liters).
9. Start the engine and inspect for leaks at the filter and at the drain plug.
10. Stop the engine. Wait 15 minutes to allow the oil to settle. Correct any leaks.
11. Check the oil level on the dipstick. Add oil as required to bring the level to the high mark on the dipstick.

☞NOTE:

Refer to the Cummins Operation & Maintenance Manual for further engine related preventive maintenance operations.

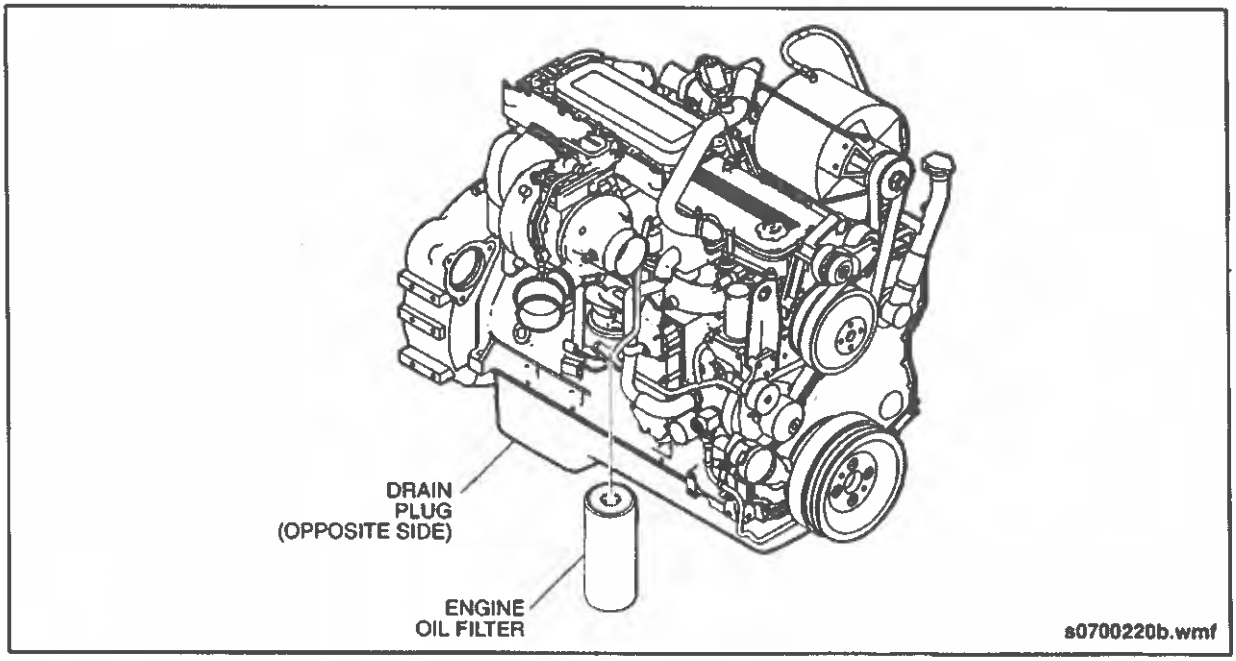

Fig. PM-13: Engine Oil Filter

The New Flyer vehicles described in this manual may be protected by one or more patents and design applications or registrations in the United States and Canada, and in other countries. Refer to "Vehicle Patent Information" in this manual.
Copyright © 2014 New Flyer Industries Canada ULC

2.9.8.1. Engine Oil Change Intervals

ENGINE OIL CHANGE INTERVALS			
AVERAGE VEHICLE SPEED	INTERVAL		
	Mileage (km)	Operating Hours	Months
10 - 15 mph (16 - 24 km/h)	6,000 (9,600)	500	6
8 - 10 mph (13 - 16 km/h)	5,000 (8,000)	500	6
6 - 8 mph (9.6 - 13 km/h)	4,000 (6,400)	500	6
4 - 6 mph (6.4 - 9.6 km/h)	3,000 (4,800)	500	6
2 - 4 mph (3.2 - 6.4 km/h)	1,500 (2,400)	500	6

The New Flyer vehicles described in this manual may be protected by one or more patents and design applications or registrations in the United States and Canada, and in other countries. Refer to "Vehicle Patent Information" in this manual.
Copyright © 2014 New Flyer Industries Canada ULC

2.9.9. Primary (Suction) Fuel Filter Replacement

Replace the primary fuel filter every 6,000 miles (9,600 km), six months, or 500 operating hours, whichever comes first. See "Fig. PM-14: Engine Fuel Filters" on page 27.

☞NOTE:

The fuel filter is a non-serviceable spin-on type. DO NOT attempt to clean and reuse the filter assembly.

⚠CAUTION

Clean the fuel filter head and surrounding area to prevent the introduction of contaminants into the fuel system.

1. Disconnect the wiring harness from the water-in-fuel sensor.
2. Use a filter strap wrench to unscrew the filter assembly from the filter head. Drain fuel from the filter.
3. Remove the water-in-fuel sensor from the fuel filter.
4. Inspect the water-in-fuel sensor for cracks or other damage.
5. Install the water-in-fuel sensor into the new fuel filter.

⚠CAUTION

Ensure a clean fuel source is used when pre-filling the primary fuel filter. Introducing contamination into the fuel system could result in fuel pump damage.

6. Pre-fill the primary fuel filter with clean fuel.
7. Lubricate the sealing O-ring with clean lubricating oil.
8. Install the filter and tighten in accordance with the filter manufacturer's instructions.
9. Connect the wiring harness to the water-in-fuel sensor.

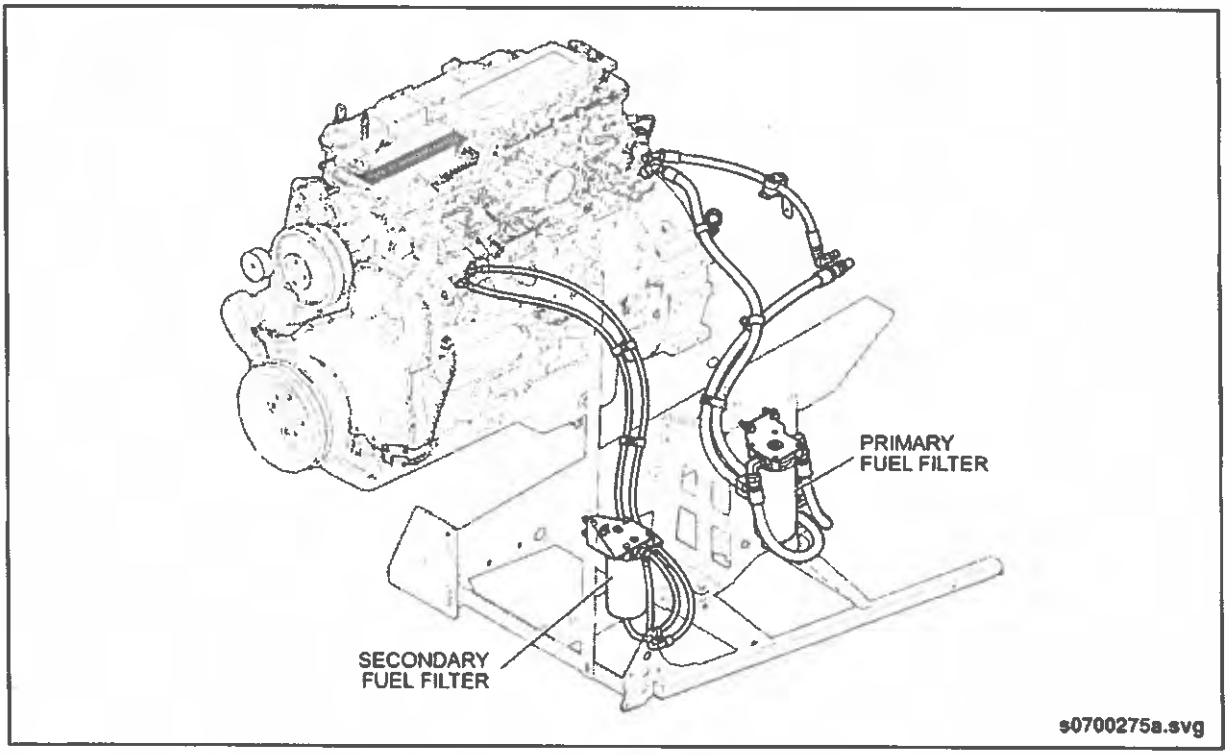

Fig. PM-14: Engine Fuel Filters

The New Flyer vehicles described in this manual may be protected by one or more patents and design applications or registrations in the United States and Canada, and in other countries. Refer to "Vehicle Patent Information" in this manual.
Copyright © 2014 New Flyer Industries Canada ULC

2.9.10. Secondary (Pressure) Fuel Filter Replacement

Replace the secondary fuel filter every 6,000 miles (9,600 km), six months, or 500 operating hours, whichever occurs first.

☞NOTE:

The fuel filter is a non-serviceable spin-on type. DO NOT attempt to clean and reuse the filter assembly.

⚠CAUTION

Clean the fuel filter head and surrounding area to prevent the introduction of contaminants into the fuel system.

1. Use a filter strap wrench to unscrew the filter assembly from the filter head. Discard the filter.
2. Inspect the filter head to see whether the filter seal ring is stuck to the sealing surface of the filter head. Remove the seal ring with an O-ring pick, if necessary.

⚠CAUTION

DO NOT pre-fill the secondary fuel filter prior to installation. ALWAYS use the engine lift pump to prime the fuel system before starting the engine.

3. Inspect new filter to ensure the center seal ring is installed on the filter spud.
4. Install the filter in accordance with the instructions provided with the filter. Do not over tighten the filter.
5. Prime the fuel system. Refer to 2.9.10.1. "Fuel System Priming" on page 28 in this section for procedure.

2.9.10.1.Fuel System Priming

⚠WARNING

DO NOT open the high pressure fuel system with the engine running. High pressure fuel spray can cause serious injury or death.

⚠CAUTION

DO NOT attempt to pre-fill the secondary filter element prior to starting the engine. Filling the filter through the center opening will allow a certain amount of fuel to bypass the 5 micron filter media within the filter, thereby allowing unfiltered fuel into the fuel system and possibly leading to engine fuel pump or injector damage.

Always prime the fuel system prior to starting the engine to avoid excessive cranking intervals, erratic engine operation, or setting engine fault codes. Proceed as follows:

1. Locate the engine run switch in the engine compartment and set the switch to the REAR position.
2. Allow the engine lift pump to cycle for approximately 30 seconds before it automatically shuts off.
3. Reset the run switch from REAR to OFF and then back to REAR position again. The lift pump should cycle for another 30 seconds. Repeat this process three or four times to allow purging all the air from the fuel filter and lines.
4. Start the engine and operate at fast idle to purge any remaining air from the system.

The New Flyer vehicles described in this manual may be protected by one or more patents and design applications or registrations in the United States and Canada, and in other countries. Refer to "Vehicle Patent Information" in this manual.
Copyright © 2014 New Flyer Industries Canada ULC

2.9.11. Exhaust System

Inspect the condition of the exhaust system components every 6,000 miles (9,600 km) as follows:

- ☐ Inspect muffler for any damage to body, sensors, wiring, or mounting brackets.
- ☐ Inspect exhaust blankets for proper installation, ensuring no cuts, tears, or other damage exists.
- ☐ Inspect exhaust tubes for dents, cracks, leaks, or restrictions.
- ☐ Inspect exhaust flex connector for proper alignment and any evidence of damage. Refer to Section 4 of this manual for alignment procedure.
- ☐ Ensure all exhaust clamps are properly tightened.
- ☐ Ensure all exhaust system mounting brackets and component fasteners are properly tightened.

2.9.12. Shock Absorber Inspection

Every 6,000 miles (9,600 km) check for and replace all shock absorbers damaged or leaking oil. Check the rubber mounting bushings and replace them if worn. Ensure the shock absorber mounting brackets are tight and the shock absorber is not striking or rubbing the frame or some other part of the chassis.

☞NOTE:

A leaking shock will show clear signs of fluid leaking in streams from the upper seal. These streams can most easily be seen when the shock is fully extended and one inspects as far up the main body of the shock (underneath the dust cover or tube) as possible. Misting shocks are often misdiagnosed as failures. A misting shock will form a film on the entire outside of the shock body. Misting is perfectly normal and a necessary function of the shock.

2.9.13. Ride Height

Every 6,000 miles (9,600 km) or after service of air suspension components check the vehicle's ride height. Measure the ride height for the front and rear suspension. Refer to Section 3 of this manual for procedures.

2.9.14. Air Springs

☞NOTE:

The air suspension system requires no lubrication.

- ☐ Examine air springs assembly for evidence of cracks, punctures, deterioration, or chafing. Replace with new air springs if any damage is evident. Any surface on upper and lower retainers or on piston that touches air springs should be smooth and free of sharp edges that might cause breaks or damage air springs. Check threads on studs.
- ☐ Check for air leakage at all air springs upper and lower mountings. Coat mountings with soap and water solution and watch for appearance of soap bubbles. No leakage is permissible. If leakage is evident, rubber air springs must be replaced.
- ☐ Check to see that there is sufficient clearance around the complete circumference of the air spring while at its maximum diameter. Make sure contact doesn't exist between any air system component and the outside diameter of the air spring.
- ☐ Check for tightness on all mounting hardware. Retorque to the proper specifications. Refer to "Suspension Torque Specifications" in Section 1 and 2 of this manual for correct values. Do not overtighten.

The New Flyer vehicles described in this manual may be protected by one or more patents and design applications or registrations in the United States and Canada, and in other countries. Refer to "Vehicle Patent Information" in this manual.
Copyright © 2014 New Flyer Industries Canada ULC

2.9.15. Front & Rear Axles & Suspension

- ☐ Visually inspect all axle and suspension components for any evidence of damage.
- ☐ Visually inspect all suspension bushings and rubber components for cracks, tears, separation or other damage.
- ☐ Inspect center link, drag link, and tie-rod ends for excessive play. Use a pry bar to lever the component and inspect for excessive movement. Refer to Section 1 and 2 of this manual for specific inspection procedures.
- ☐ Perform a visual torque inspection of all axle and suspension fasteners. Ensure that the torque witness marks are in alignment. Any fastener that has illegible or missing witness marks should be re-torqued to specification. Refer to Section 1 and 2 of this manual for torque specifications.

☞NOTE:

If the witness marks are no longer aligned, it is an indication that the fastener has loosened and it will be necessary to replace the fastener, torque to specification, and reapply torque witness mark.

2.9.16. Radius Rods

☞NOTE:

The radius rods are of similar configuration except for the upper radius rod on the front axle which does not have tubular construction, replaceable bushings, nor snap-rings. All other inspection criteria apply.

Inspect all radius rods every 6,000 miles (9,600 km) as follows:

- ☐ Visually inspect torque witness marks on fasteners. If witness marks are not legible, then apply specified torque and paint a witness mark across fastener. Refer to Section 1 & 2 of this manual for torque specifications.
- ☐ Visually inspect radius rod tubes for deformation. Replace radius rod as an assembly if tube is deformed.
- ☐ Inspect bushings for wear by using a pry bar. Apply force both axially and laterally while observing movement. Any excessive relative movement between the rubber component of the bushing and the cross-pin and/or the eye of the radius rod is cause for bushing replacement.

☞NOTE:

If axial or lateral movement is suspect, remove radius rod from vehicle and confirm excessive bushing movement by clamping cross-pin in a vise and moving radius rod through its operating range.

- ☐ Visually inspect rubber component of bushing for cracks or separation. Small cracks are acceptable. Separation of the rubber from the metal cover plate or cross-pin is acceptable providing the separation does not exceed 1/3 of the circumference of the bushing.
- ☐ Inspect the metal cover plate of the bushing for cracks. Replace bushing if cover plate is cracked.
- ☐ Inspect snap-ring to ensure it is installed and fully seated. Check for shiny wear marks as evidence of snap-ring movement. Replace bushing and inspect condition of snap-ring groove if snap-ring is missing, broken, or has rotated significantly.
- ☐ If excessive wear, corrosion or other damage is noted in the snap-ring groove or bore of the radius rod during the course of bushing replacement, then the radius rod should be replaced as an assembly.

2.9.17. Air System Functional Tests

Refer to Section 8 of this manual for procedures.

The New Flyer vehicles described in this manual may be protected by one or more patents and design applications or registrations in the United States and Canada, and in other countries. Refer to "Vehicle Patent Information" in this manual.
Copyright © 2014 New Flyer Industries Canada ULC

2.9.18. Driver's Window

Inspect the driver's window every 6,000 miles (9,600 km) as follows:

- ❒ Slide the forward sash fully aft and ensure the sash slides smoothly and makes contact with the window stop.
- ❒ Inspect the condition of the weather-stripping in the lower window channel/track. Clean window channel/track by vacuuming.
- ❒ Inspect the interior and exterior handles to ensure they are securely mounted.

2.9.19. Window Emergency Release System

Every 6,000 miles (9,600 km) check and clean the emergency release system of the side windows. The emergency release system must be free of excessive build-up (road salt, dirt and so forth). See "Fig. PM-15: Window Emergency Release" on page 31.

Fig. PM-15: Window Emergency Release

The New Flyer vehicles described in this manual may be protected by one or more patents and design applications or registrations in the United States and Canada, and in other countries. Refer to "Vehicle Patent Information" in this manual.
Copyright © 2014 New Flyer Industries Canada ULC

2.9.20. Interior & Exterior Access Doors

Every 6,000 miles (9,600 km) lubricate the piano hinges and latch mechanisms.

2.9.21. Roof Vent/Hatch

- ❒ At each vehicle cleaning interval use a mild soap and water solution to clean the Vent/Hatch surfaces and components. Do not use solvents or petroleum based cleaners or coatings. Do not lubricate its moving parts.
- ❒ Inspect the Vent/Hatch moving parts every 6,000 miles (9,600 km). Make sure the latches close and fasten securely. The latches must fasten securely, with no slack or looseness. If the attaching hardware cannot be tightened, replace the applicable latch parts using new hardware and fasteners. See "Fig. PM-16: Roof Hatch Inspection" on page 32.
- ❒ In cold climates, check daily and remove any accumulated ice and snow that may restrict movement of the Vent/Hatch.

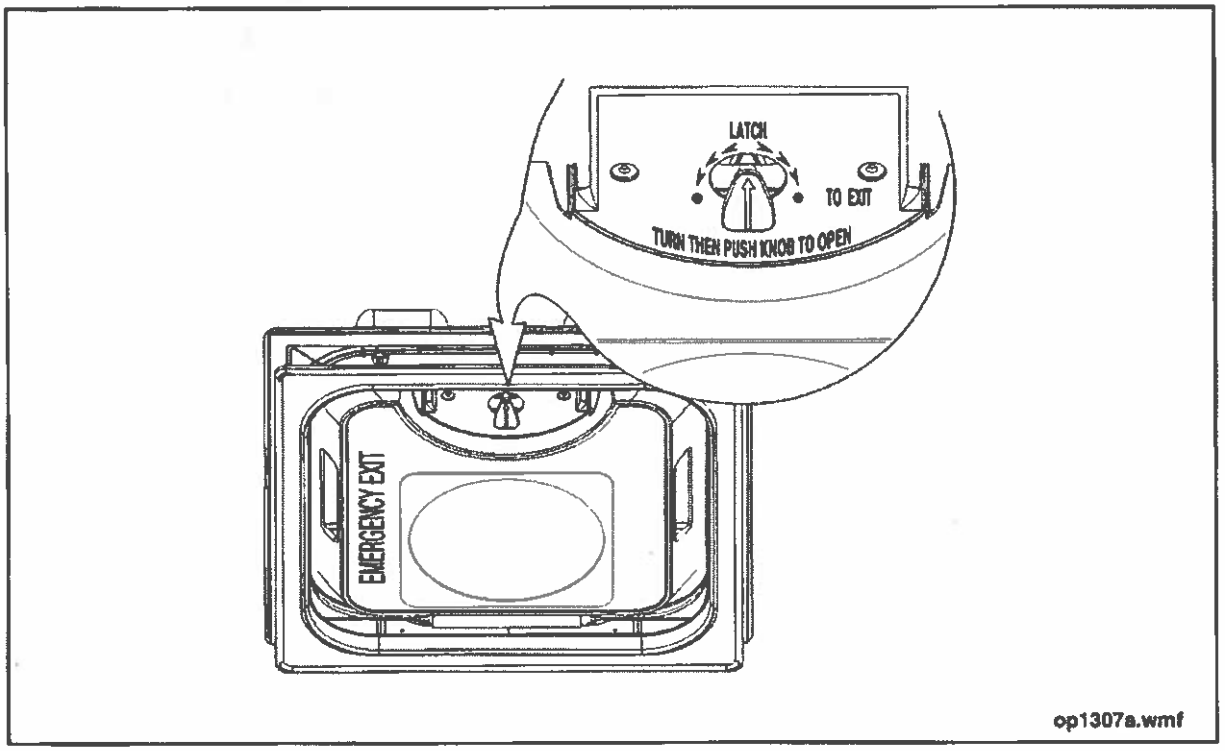

Fig. PM-16: Roof Hatch Inspection

The New Flyer vehicles described in this manual may be protected by one or more patents and design applications or registrations in the United States and Canada, and in other countries. Refer to "Vehicle Patent Information" in this manual.
Copyright © 2014 New Flyer Industries Canada ULC

2.9.22. Splash Guards

- ☐ Check splash guards every 6,000 miles (9,600 km) for loose bolts and damage.
- ☐ Tighten loose bolts and replace any unserviceable guards.
- ☐ Check that ground clearance is within specifications.

2.9.23. Windshield Wiper & Washer

- ☐ Check wiper operation and condition.
- ☐ Remove any accumulated dirt and grit from the wiper blade.
- ☐ Check that the washer system emits an adequate flow of washer fluid.

2.9.24. Passenger Seats

- ☐ Every 6,000 miles (9,600 km) clean the upholstery. Refer to Section 17 of this manual for procedures.
- ☐ Inspect seats for rips or tears. Repair, patch or replace as required.

2.9.25. Stanchions & Grab Rails

Inspect stanchions and grab rails for security of attachment and any evidence of damage. Tighten any loose hardware. Replace any damaged components.

2.9.26. Wheelchair Tie-Down & Occupant Restraints

Perform the following activities every 6,000 miles (9,600 km):

- ☐ Clean belts as required using mild soap and water. Do not use solvents, chemical solutions or strong detergents. If required, soak belts for several hours in water to loosen dirt. Clean, rinse and dry thoroughly before returning to service.
- ☐ Lubricate the tiedown belt buckles at the hinges being careful not to contaminate the webbing.

2.9.27. Interior Panels

Inspect panels for scuffs, cracks and other forms of damage. Clean panels and repair any defects. Refer to Section 12 of this manual for further information on the interior panels.

2.9.28. Exterior Panels

- ☐ Every 6,000 miles (9,600 km) inspect the sealant and caulking of the exterior panel seams, and wheel-housings. Replace where substance has failed.

⚠CAUTION

Use only the recommended type of sealant, caulk or adhesive. Refer to Section 13 of this manual for recommended type. DO NOT use substitutes.

- ☐ Clean the entire vehicle thoroughly to inspect for paint condition and for metal corrosion damage. Pay particular attention to the lower panels. Repair any areas with paint failure, or corrosion.

☞NOTE:

Increase inspection frequency in freezing weather, due to the effect of road deicing materials (salt, calcium chloride and so forth) on metal.

- ☐ Protect painted surfaces with a coating of wax immediately after the vehicle has been cleaned.

⚠CAUTION

When cleaning the painted surfaces of the vehicle, use a cleaning agent that will not harm the acrylic finish or fiberglass panels. (for example soap and water).

The New Flyer vehicles described in this manual may be protected by one or more patents and design applications or registrations in the United States and Canada, and in other countries. Refer to "Vehicle Patent Information" in this manual.
Copyright © 2014 New Flyer Industries Canada ULC

2.9.29. Battery System

⚠WARNING

ALWAYS replace batteries with the same type and size identified in your New Flyer Parts Manual and charge the batteries using the recommended voltage. Over-charging a lead acid battery can produce explosive and hazardous gas. Any change in battery configuration may require modification to the charging system voltage levels and battery service procedures to prevent over-charging and equipment damage. Consult the batter manufacturer's recommendations before installing replacement components.

- ☐ Check external condition of battery and battery cables. Tighten hold-down nuts to prevent batteries from shaking but not so tight as to strain battery case. See "Fig. PM-17: Battery Tray" on page 34.
- ☐ Check the battery cable ends on the battery posts. To ensure good contact, these must be tightened firmly.
- ☐ Check for post or cable end corrosion. If corrosion exists disconnect cables from the posts and clean both with soda solution and a wire brush. Install ends and tighten firmly, then coat with dielectric grease.
- ☐ Check battery for obvious damage such as, cracked case (shows loss of electrolyte), or damaged, cracked, or loose terminal posts.
- ☐ If damage is noted, replace battery.
- ☐ Check battery state of charge and charging rate. Refer to Section 9 of this manual for battery specifications and voltage regulator settings.

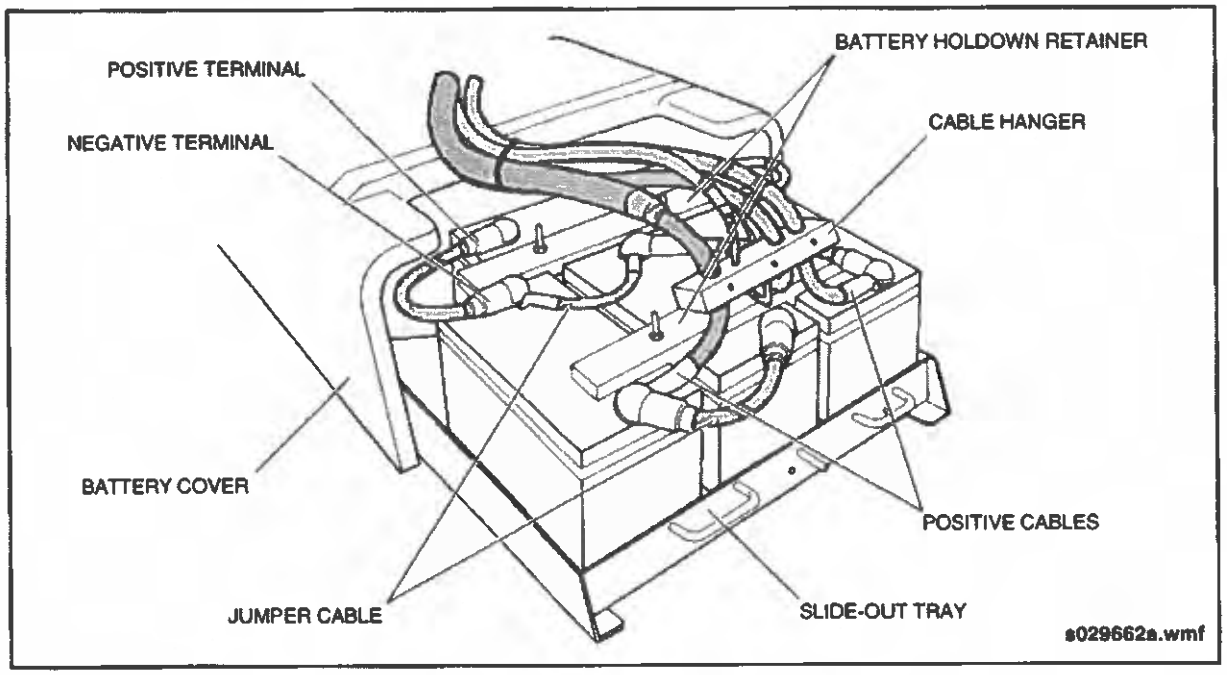

Fig. PM-17: Battery Tray

The New Flyer vehicles described in this manual may be protected by one or more patents and design applications or registrations in the United States and Canada, and in other countries. Refer to "Vehicle Patent Information" in this manual.
Copyright © 2014 New Flyer Industries Canada ULC

2.9.30. Wheelchair Ramp Inspection

Inspect & lubricate the wheelchair ramp mechanism every 6,000 miles (9,600 km).

2.9.30.1.Mechanism

- ☐ Inspect and adjust chain tension as required. Refer to Section 20 of this manual for inspection and adjustment procedure.
- ☐ Inspect ramp pump electrical connectors for condition and security. See "Fig. PM-18: Wheelchair Ramp Inspection" on page 35.
- ☐ Inspect electrical harnesses and hydraulic hoses for condition and secure attachment.
- ☐ Inspect fluid level in reservoir. Top up as required.
- ☐ Inspect and tighten mounting hardware as required.
- ☐ Ensure stowed proximity switch is functioning and is positioned to activate at 15° from the STOWED position.

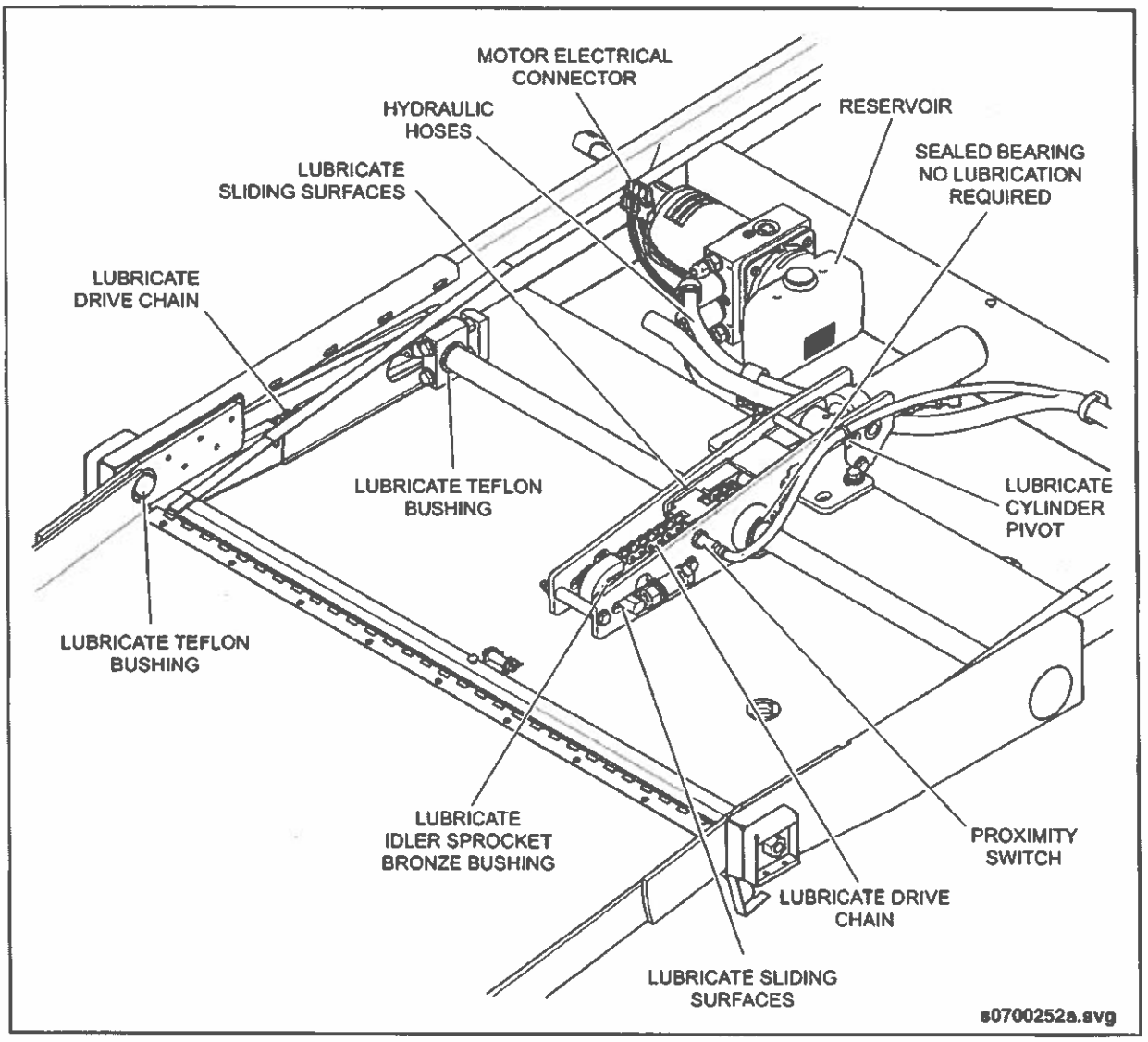

Fig. PM-18: Wheelchair Ramp Inspection

The New Flyer vehicles described in this manual may be protected by one or more patents and design applications or registrations in the United States and Canada, and in other countries. Refer to "Vehicle Patent Information" in this manual.
Copyright © 2014 New Flyer Industries Canada ULC

2.9.30.2.Lubrication

Refer to 2.33. "Fluid & Lubrication Guide" on page 86 in this section for lubricant specification. Clean existing lubricated surfaces of any dirt, grime, or dried lubricant and then apply fresh lubricant to the following areas:

- ☐ Drive chain rollers and side plates.
- ☐ Teflon sleeve bushings located on the tensioner blocks.
- ☐ Teflon sleeve bushings located on the LH and RH ramp pivots.
- ☐ Bronze bushing located on idler sprocket.
- ☐ Hydraulic cylinder pivot.
- ☐ Between the sliding surfaces of the mechanism (slots in the support plates and flats on the push shaft and clevis shaft).
- ☐ Hydraulic cylinder pivot points.

Operate the wheelchair ramp through several cycles to distribute the lubricant into the working surfaces.

The New Flyer vehicles described in this manual may be protected by one or more patents and design applications or registrations in the United States and Canada, and in other countries. Refer to "Vehicle Patent Information" in this manual.
Copyright © 2014 New Flyer Industries Canada ULC

2.9.31. Driver's Heater/Defroster

⚠CAUTION

Reposition Battery Disconnect switch to OFF before servicing heater/ defroster electrical components to avoid shorts.

- ☐ Lubricate and adjust the cables and switch hook-ups. Cable ends and switch hook-ups can be accessed by opening the defroster access door and removing the defroster cover. See "Fig. PM-19: Defroster Inspection" on page 37.
- ☐ Inspect air filter. Clean or replace as required.
- ☐ Inspect electrical plugs for clean contacts. Check wiring for proper routing and for any evidence of rubbing.
- ☐ Inspect condition of coolant hoses and ensure all hoses clamps are properly tightened.

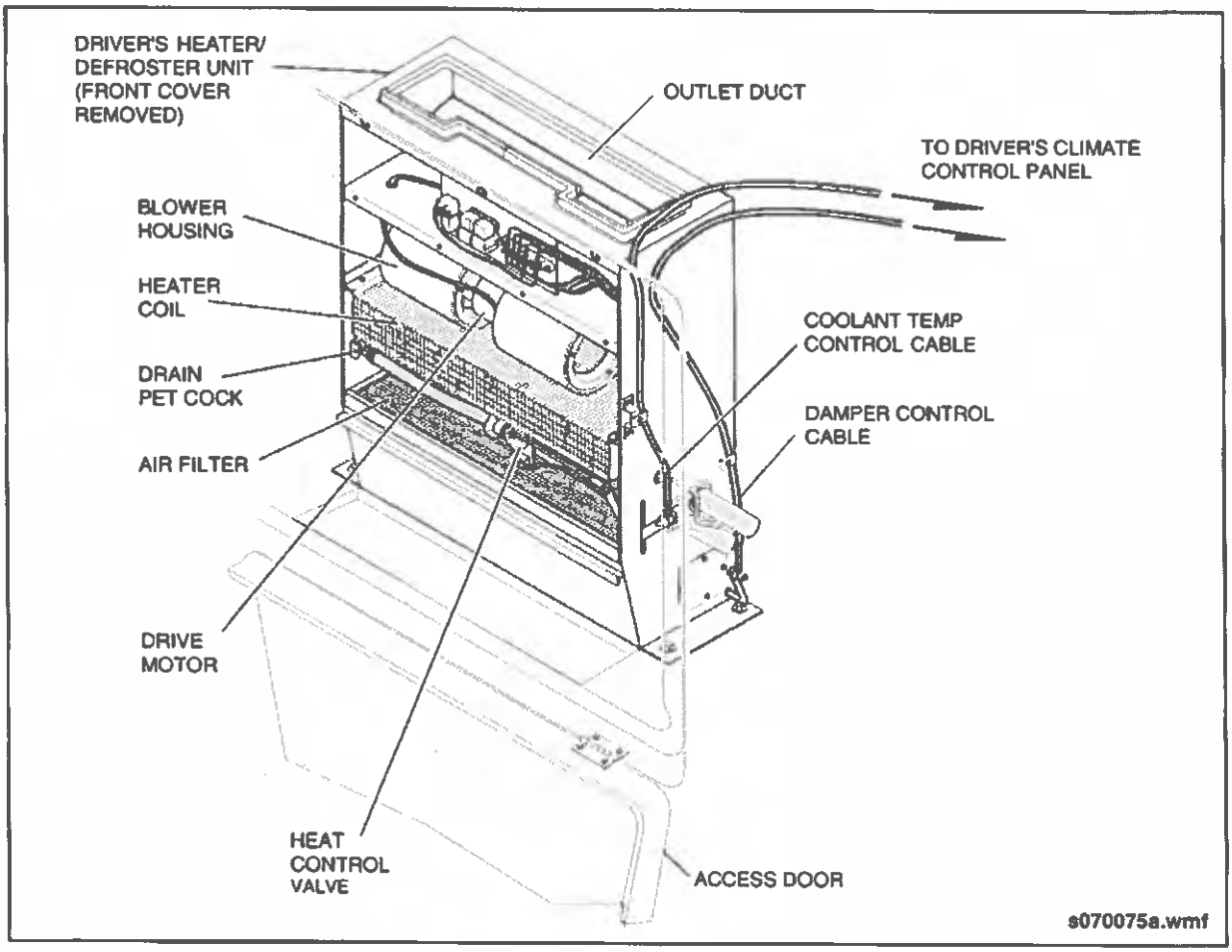

Fig. PM-19: Defroster Inspection

The New Flyer vehicles described in this manual may be protected by one or more patents and design applications or registrations in the United States and Canada, and in other countries. Refer to "Vehicle Patent Information" in this manual.
Copyright © 2014 New Flyer Industries Canada ULC

2.9.32. HVAC Return Air Filter

Clean or replace filter as required every 6,000 miles (9,600 km). See "Fig. PM-20: HVAC Return Air Filter" on page 38.

1. Locate the HVAC return air grille on the ceiling of the vehicle.
2. Unlatch the return air grille and allow the grille to swing downward.
3. Reach up and release the shock cord from the filter frame.
4. Remove the filter from the filter frame.
5. Remove accumulated debris by blowing compressed air in direction opposite to normal air flow.
6. Wash filter in warm soapy water, rinse, and allow to dry.
7. Installation is the reverse of removal.

2.9.33. HVAC Fresh Air Filter

☞NOTE:

The HVAC fresh air filter can be accessed either from the interior of the vehicle through the HVAC return air access door, or from the rooftop of the vehicle through the HVAC cover.

Clean or replace filter as required every 6,000 miles (9,600 km).

1. Remove the HVAC return air filter. Refer to 2.9.32. "HVAC Return Air Filter" on page 38 in this section for removal instructions.
2. Locate the HVAC fresh air filter on the streetside of the HVAC compartment. Grasp the center of the filter and bow it outward to release the filter edges from the mounting channel.
3. Remove accumulated debris by blowing compressed air in direction opposite to normal air flow.
4. Wash filter in warm soapy water, rinse, and allow to dry.
5. Installation is the reverse of removal.

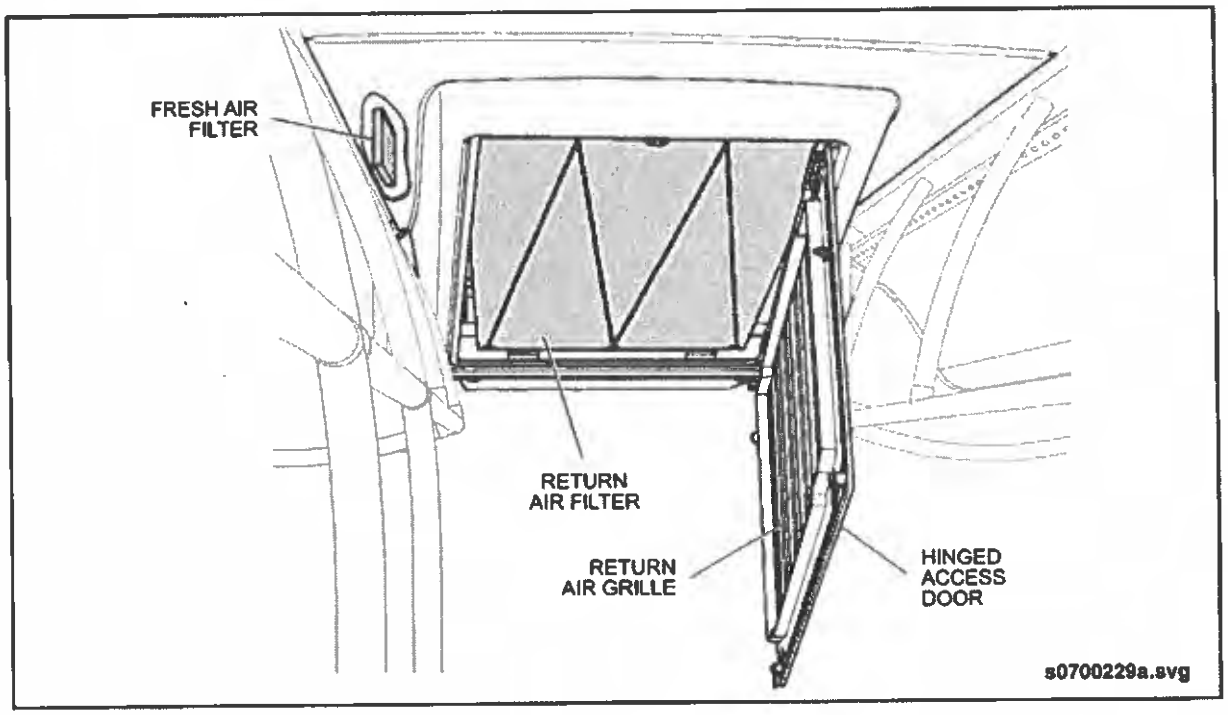

Fig. PM-20: HVAC Return Air Filter

The New Flyer vehicles described in this manual may be protected by one or more patents and design applications or registrations in the United States and Canada, and in other countries. Refer to "Vehicle Patent Information" in this manual.
Copyright © 2014 New Flyer Industries Canada ULC

2.9.34. Rear Axle Breather Tube

⚠CAUTION

DO NOT attempt to shorten or otherwise relocate the breather tube. The volume inside the tube acts as an expansion reservoir and must be at least 5 ft. (1.5 m) in length.

- ☐ Check that the breather tube is securely attached to the elbow located on top of the differential housing and is attached to the breather membrane, located on the street-side suspension support. See "Fig. PM-21: Rear Axle Breather Inspection" on page 39.
- ☐ Clean any sludge or debris accumulation from the breather membrane outlet and ensure that the tube is clear. Replace the breather membrane (valve) if clogged, dirty, or oil soaked. Refer to 2.9.34.1. "Breather Valve Replacement" on page 39 in this section for procedure.

2.9.34.1. Breather Valve Replacement

1. Remove the breather tube from the valve by pushing the collar on the valve towards the valve body. Maintain pressure on the collar while pulling out the tube.
2. Inspect the end of the breather tube before installing new breather valve. Tubing end must be cut square and free from any burrs or rough edges.
3. Push tube into breather valve until seated.

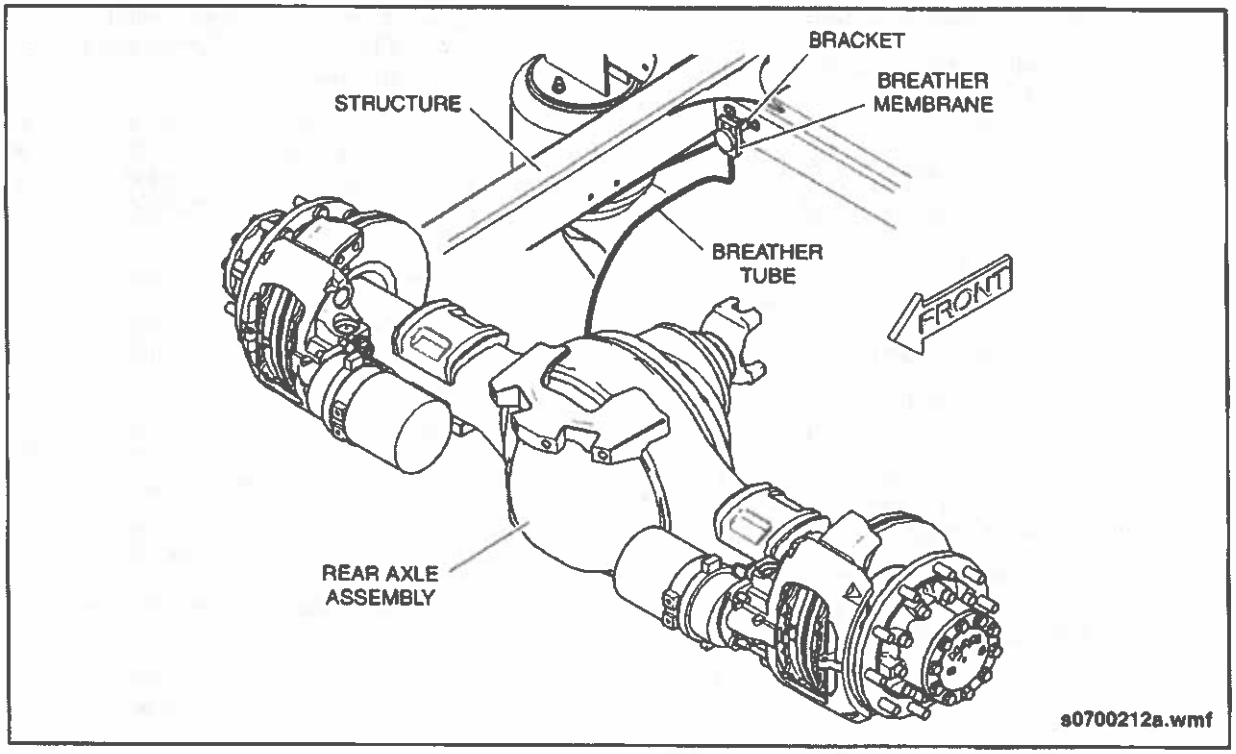

Fig. PM-21: Rear Axle Breather Inspection

The New Flyer vehicles described in this manual may be protected by one or more patents and design applications or registrations in the United States and Canada, and in other countries. Refer to "Vehicle Patent Information" in this manual.
Copyright © 2014 New Flyer Industries Canada ULC

2.9.35. Engine Compartment Line Routing Inspection

Perform a visual inspection on the condition and routing of all engine compartment lines every 6,000 miles (9,600 km) or whenever line or harness maintenance/ replacement has occurred. For the purpose of this inspection, engine compartment lines may be defined as all rigid steel lines and copper tubing, flexible lines, hoses, and tubing as well as electrical cables and harnesses. This inspection applies to all lines used in the fuel, air, hydraulic, lubricating, cooling, electrical, and HVAC systems. Open all engine compartment doors and inspection panels to allow complete inspection of the area. It may be necessary to raise the vehicle to properly inspect all lines.

2.9.35.1.Line Condition Inspection

1. Inspect all rigid lines for condition. Repair or replace the line if any of the following conditions are evident:
   a. Abraded or fretted surfaces
   b. Kinked or deformed tubing
   c. Corrosive pitting
   d. Loose mounting flanges or connectors
   e. Fluid or air leakage
   f. Excessive buildup of oily residue, dirt or road grime. Clean as required.
2. Inspect all flexible lines and hoses for condition. Repair or replace the line if any of the following conditions are evident:
   a. Cut, abraded, or frayed protective cover (includes textile, polyester, or steel braid as well as silicone firesleeving).
   b. Crushed, kinked, distorted, or twisted hose.
   c. Charred, heat damaged, cracked, hard, or stiff hose.
   d. Blistered, soft, or deteriorated hose.
   e. Loose mounting flanges or fittings/connectors
   f. Cracked or corroded fittings/connectors.
   g. Fluid or air leakage.
   h. Excessive buildup oily of oily residue, dirt or road grime. Clean as required.
3. Inspect exhaust bellows for correct alignment with exhaust tubes on either side of bellows. Examine the tubes and bellows from above and below, with a 90° angle between the viewing points. The exhaust tubes on either side of the bellows must be aligned parallel with each other and display no offset. Convolutions of bellows must be evenly spaced from one end of the bellows to the other. Replace bellows if it is torn or otherwise damaged. Refer to Section 4 of this manual for further information on this equipment.
4. Inspect all power cables and wiring harnesses for condition. Repair or replace the cable, harness, and/or protective covering if any of the following conditions are evident:
   a. Loose or corroded connections
   b. Damaged or missing protective insulator boots on positive terminals of power cables.
   c. Lack of dielectric grease on exposed power cable terminals. Clean terminals and reapply dielectric grease.
   d. Crushed, cut, or heat-damaged wire covering (corrugated split-loom).
   e. Blistered, soft, or deteriorated wire insulation.
   f. Excessive buildup of oily residue, dirt or road grime. Clean as required.

The New Flyer vehicles described in this manual may be protected by one or more patents and design applications or registrations in the United States and Canada, and in other countries. Refer to "Vehicle Patent Information" in this manual.
Copyright © 2014 New Flyer Industries Canada ULC

2.9.35.2.Line Routing Inspection

1. Inspect all rigid lines for proper routing. Provide additional or repositioned clamping, if the following conditions exist:
   a. Line runs across another line, component, or vehicle structure without being properly clamped.
   b. Line is improperly held by clamp. Select proper clamp size or tighten clamp as necessary. Clamp must fit snugly on line without causing restriction.
   c. Ensure band clamps (typically used to attach rubber hose to metal tubing) are tight.
2. Inspect all flexible lines and hoses for proper routing.
   a. Ensure lines are not routed in close proximity to hot zones such as the turbocharger, engine exhaust, auxiliary coolant heater etc. Provide additional clamps or reposition the existing clamps to obtain the required clearance (minimum 1"). Use brackets or spacers, if necessary, to obtain the required clearance. Provide protective shielding in situations where the optimum clearance cannot be achieved.

⚠CAUTION

DO NOT clamp or cable tie fuel lines to electrical cables/harnesses. Maintain a minimum clearance of 1/2" between fuel lines and electrical cables/harnesses.

DO NOT use cable ties on textile or steel braided lines.

   b. Ensure lines do not run across another line, component, or vehicle structure without being properly clamped.

☞NOTE:

It is permissible to cable tie synflex air lines with synflex fuel lines.

   c. Ensure lines meet the minimum bend radius requirements. Provide a minimum bend radius of six times the diameter of the line. Reposition line or replace with a line of the proper length if necessary.
   d. Ensure flexible lines are routed and clamped so as to provide minimal slack without being taut. Provide additional slack in lines where there could be relative movement between the joined locations. Do not space clamps less than 12 inches apart.
   e. Provide cushioned loop clamps (P-clamps) or plastic split-block style clamps in locations where vibration or road shock may be transmitted to the line. Plastic split-block style clamps are typically used with large diameter lines only.
   f. Inspect condition of P-clamps to ensure they are tight and the rubber cushion is intact and in full contact with the line. Replace P-clamp if the rubber cushion is not of the full enclosure style.

The New Flyer vehicles described in this manual may be protected by one or more patents and design applications or registrations in the United States and Canada, and in other countries. Refer to "Vehicle Patent Information" in this manual.
Copyright © 2014 New Flyer Industries Canada ULC

3. Inspect all power cables and wire harnesses for proper routing.

⚠CAUTION

DO NOT clamp or cable tie electrical cables/harnesses to fuel lines. Maintain a minimum clearance of 1/2" between fuel lines and electrical cables/ harnesses.

a. Ensure cables/harnesses do not run across another line, component, or vehicle structure without being properly clamped. Ensure that grommets or rubber edging are used wherever the cable/harness passes through a bulkhead or panel.

☞NOTE:

It is permissible to cable tie electrical wire harnesses to synflex air lines but not to textile or steel braided lines.

b. Ensure cables/harnesses are not clamped to another hose or line. Cables/harnesses should be clamped only to stationary structure or brackets.

⚠CAUTION

Damage to the internal wire bundle can occur if the wire loom is clamped to an object subject to excessive vibration. The vibrations can transmit through the cushioned clamp and create relative movement between the internal wire bundle and the corrugated surface of the wire loom, resulting in damage to the wire insulation over a period of time. Use an alternative clamping method that will isolate the vibration or relocate the wire harness and clamp at a different location.

c. Ensure cables/harnesses are secured with P-clamps wherever practical. Harnesses should be clamped no more than 24 inches apart, where possible. Use cable ties to secure any portion of a harness bundle that cannot be secured within the P-clamps. Maintain the same relationship between clamped and unclamped wire harness looms throughout the entire run of the wire bundle. Use cable ties at 12" intervals. Ensure cable ties are not overtightened or supporting too much weight so as to cut into the wire loom.

d. Ensure that cable ties are not used within four inches of the connector. Provide strain relief or otherwise allow some flexion at the terminal connector. It is acceptable, however, to cable tie the terminal connector body itself when it is running parallel with another harness.

e. The excessive length of a harness may require that it be looped. Ensure that the harness is looped in an appropriate area and that the minimum bend radius is observed. Provide a minimum bend radius of six times the diameter of the harness.

f. Inspect condition of P-clamps to ensure they are tight and the rubber cushion is intact and in full contact with the cable/ harness.

The New Flyer vehicles described in this manual may be protected by one or more patents and design applications or registrations in the United States and Canada, and in other countries. Refer to "Vehicle Patent Information" in this manual.
Copyright © 2014 New Flyer Industries Canada ULC

2.10. 7,500 Miles (12,000 km) Preventive Maintenance

2.10.1. Air Filter Restriction Indicator Inspection

Inspect the air filter restriction indicator every 7,500 miles (12,000 km), 250 hours, or 3 months, whichever occurs first. Locate the restriction indicator in the engine compartment and refer to the scale on the indicator that is calibrated in inches of water. Replace the air filter element if the reading exceeds 18" H_2O.

The service life of an air filter element is affected by several factors including operating environment, hours of operation, and total time in service. The requirement for air filter element replacement is determined by monitoring the reading on the Filter Minder® air filter gauge. This gauge monitors air restriction downstream of the air cleaner assembly. See "Fig. PM-22: Air Filter Restriction Indicator" on page 43.

The air filter gauge is calibrated in inches of water on one side and millimeters of water on the opposite side. The gauge will register and retain the highest air restriction reading experienced during operation. Maximum air restriction readings will be obtained typically during full throttle, full load operation.

Air filter element replacement is required when the filter media has trapped approximately 80% of its load carrying capacity. This capacity equates to an air filter gauge reading of 18 to 20 inches of water. The air filter element is considered to have reached its maximum service life at this point and must be replaced. Refer to 2.10.2. "Air Filter Replacement" on page 44 in this section for replacement procedure.

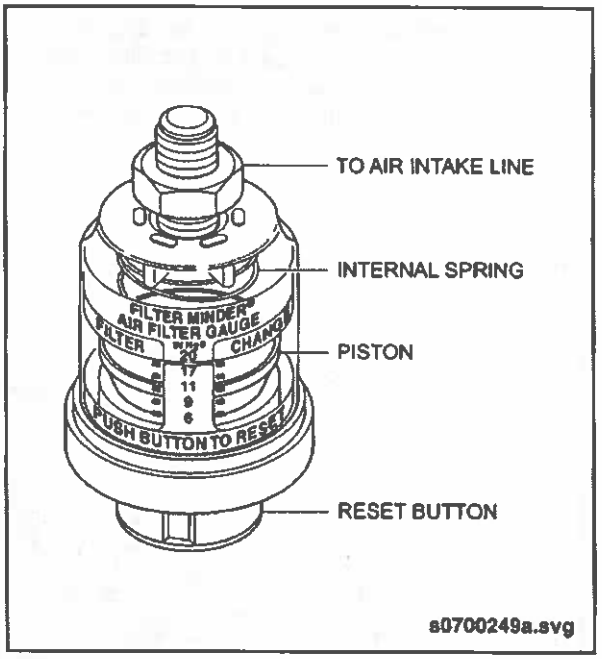

Fig. PM-22: Air Filter Restriction Indicator

The New Flyer vehicles described in this manual may be protected by one or more patents and design applications or registrations in the United States and Canada, and in other countries. Refer to "Vehicle Patent Information" in this manual.
Copyright © 2014 New Flyer Industries Canada ULC

2.10.2. Air Filter Replacement

The air filter housing assembly includes a primary and safety element. The primary element provides engine protection during operation and the safety element is designed to prevent contaminates from entering the induction system during servicing. The safety element is located within the filter housing, immediately downstream of the primary element. See "Fig. PM-23: Air Filter Elements" on page 44.

The replacement interval for the primary element is determined by the filter restriction indicator reading. Replace the primary element when the gauge reading is between 18 to 20 inches of water. The safety element should be replaced every third primary element change or whenever the surface of the safety element has become contaminated.

☞NOTE:

There is no need to remove and visually inspect the air filter element if the indicator reading is less than 18" H_2O. Replacing the air filter element at 18" H_2O. will maximize the service life of the filter and minimize any risk associated with excessive handling of the air filter.

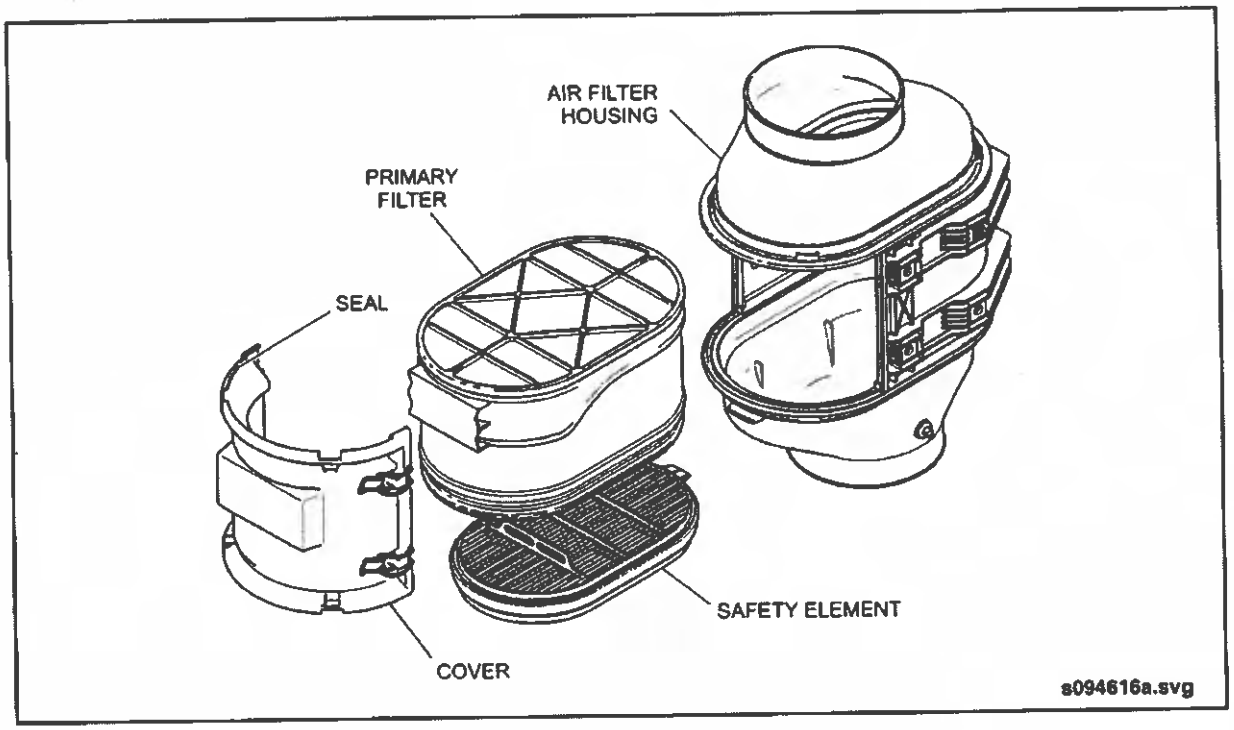

Fig. PM-23: Air Filter Elements

The New Flyer vehicles described in this manual may be protected by one or more patents and design applications or registrations in the United States and Canada, and in other countries. Refer to "Vehicle Patent Information" in this manual.
Copyright © 2014 New Flyer Industries Canada ULC

2.10.2.1.Removal

1. Open the air filter access door located on the rear curbside corner of the vehicle.

⚠CAUTION

The air filter housing is mounted with the clean air outlet pointing downward and care must be used when performing an element replacement to avoid contaminating the induction system during servicing.

2. Remove the air filter housing cover by releasing the four over-center latches located on both sides near the center of the body. Remove the cover by pulling straight out from the housing.
3. Using the plastic handle on the primary element gently lift up on the element to loosen the gasket seal, which will tilt the element to an approximate 5 degree angle. Carefully remove the primary element from housing.
4. Carefully clean out all contaminates from the housing and sealing surfaces with a damp cloth before servicing the safety element.

⚠CAUTION

The lower elbow located at the base of the vertical air intake pipe must be disconnected before removing the safety filter. Removal of the safety filter may dislodge dirt or other contaminants that could enter the air intake system.

5. If the safety element has to be replaced use the plastic handle on the face of the safety element. Pull the element towards the center of the housing and carefully remove it from the housing to avoid contaminates from entering the induction system.

☞NOTE:

If new elements are not going to be installed immediately, temporarily cover the outlet tube to prevent contaminants from entering the air intake system.

6. Carefully wipe out the safety seal surface in the housing with a damp cloth.

2.10.2.2.Inspection

1. Inspect the rubber seal on air filter housing access door (U-shaped cover with four over-center latches). Replace the access door if the seal is deteriorated or damaged. Refer to your New Flyer Parts Manual for part number of access door.
2. Inspect the clamped connections at the inlet and outlet of the air filter housing. There should be no evidence of bulged or deformed hoses.

⚠CAUTION

DO NOT exceed 40 in-lbs torque on the hose clamps. Over-tightening the clamps will deform the plastic air filter housing inlet/outlets.

3. Use a bright light to inspect the interior of the air filter housing and check for any evidence of distortion or cracking on the inlet and outlet clamped connections. Replace air filter housing if cracked or damaged. Refer to Section 4 of this manual for replacement procedure.
4. Shine a bright light into the air intake tube leading away from the air filter housing and ensure no evidence of dust trails or other contaminants exist. Remove air intake piping and clean as necessary.

The New Flyer vehicles described in this manual may be protected by one or more patents and design applications or registrations in the United States and Canada, and in other countries. Refer to "Vehicle Patent Information" in this manual.
Copyright © 2014 New Flyer Industries Canada ULC

2.10.2.3.Installation

1. Install the safety element using the handle facing up and outward. Insert the safety element tab into the positioning slot before pushing the element down into place.

   ☞NOTE:

   The safety element handle must be towards the service cover opening and completely seated to allow for proper installation of the primary element.

2. Use the handle on the primary element to insert it into the housing at the same angle as it was removed. Insert the element until it makes contact with the inside of the housing. Pull down on the handle to complete the seal.

   ☞NOTE:

   The element must be completely seated to allow for proper installation of service cover.

⚠CAUTION

NEVER use latches to force the element into place.

3. Install service cover with the indexed rib at the top and attach all 4 latches. If the cover doesn't seat, remove and re-check the filter position.
4. Clean and reinstall lower elbow to air intake pipe. Torque T-Bolt clamps at either end of elbow to 85 in-lbs.

2.10.3. Charge Air Cooler & Piping

Inspect the charge air cooler & piping every 7,500 miles (12,000 km), 250 hours, or 3 months, whichever occurs first.

- ☐ Inspect the charge air cooler (CAC) for dirt and debris blocking the fins. Check for cracks, holes, or other damage. If damage is found, refer to Section 6 of this manual for replacement procedures.
- ☐ Inspect the charge air piping and hoses for leaks, holes, cracks, or loose connections. Tighten the hose clamps if necessary.

The New Flyer vehicles described in this manual may be protected by one or more patents and design applications or registrations in the United States and Canada, and in other countries. Refer to "Vehicle Patent Information" in this manual.
Copyright © 2014 New Flyer Industries Canada ULC

2.11. 12,000 Miles (19,300 km) Preventive Maintenance

2.11.1. Driver's Heater/Defroster

Inspect and test the defroster blower motor every 12,000 miles (19,300 km) or as determined by operating conditions. The inspection interval will need to be more frequent during the winter months when the heaters are exposed to slush, salt and grit that have been tracked into the vehicle.

- ☐ Remove defroster access cover to allow detailed inspection of the blower motor and electrical connections.

⚠CAUTION

DO NOT attempt to clean defroster assembly using pressure washing equipment or using shop air in excess of 60 psi

- ☐ Inspect for buildup of salt or dirt deposits in and around the blower motor. Clean surfaces as necessary to remove contamination.
- ☐ Inspect electrical connectors for loose or corroded connections.
- ☐ Test operation of blower motor at all operating speeds to ensure smooth and quiet operation.
- ☐ If blower motor operation is suspect, use a clamp-on Fluke ammeter, or equivalent, to test current draw at each speed setting. Refer to Section 10 of this manual for defroster motor specifications. Replace blower motors that do not meet the specified operating limits.

☞NOTE:

Disassembly, cleaning, and repair of the blower motor is considered uneconomical and it is recommended that the blower motor be replaced if found defective.

The New Flyer vehicles described in this manual may be protected by one or more patents and design applications or registrations in the United States and Canada, and in other countries. Refer to "Vehicle Patent Information" in this manual.
Copyright © 2014 New Flyer Industries Canada ULC

2.12. 15,000 Miles (24,000 km) Preventive Maintenance

2.12.1. Cooling System

Inspect the coolant fluid level, antifreeze concentration, SCA level, and cooling system components every 15,000 miles (24,000 km), 500 hours, or six months, whichever occurs first.

2.12.1.1.Coolant Level

⚠WARNING

DO NOT attempt to open the pressure cap on the surge tank until the system has cooled down and the pressure relief valve has been operated. Opening the pressure cap with pressurized hot coolant can result in scalding injury and loss of coolant.

1. Once the system has cooled down, observe the coolant level through the fluid level markings on the recovery tank. The coolant should be level with the COLD FULL line marked on the recovery tank.

☞NOTE:

If necessary, the coolant level can be checked while system is hot by observing coolant level through the level markings on the recovery tank. The coolant level should be level with the FULL HOT marking shown on the tank. However, the system must be allowed to cool down before the filter cap is removed.

2. Top off coolant to the correct level as required using premix antifreeze. Refer to 2.33. "Fluid & Lubrication Guide" on page 86 in this section for antifreeze specification. See "Fig. PM-24: Surge Tank Inspection" on page 48.

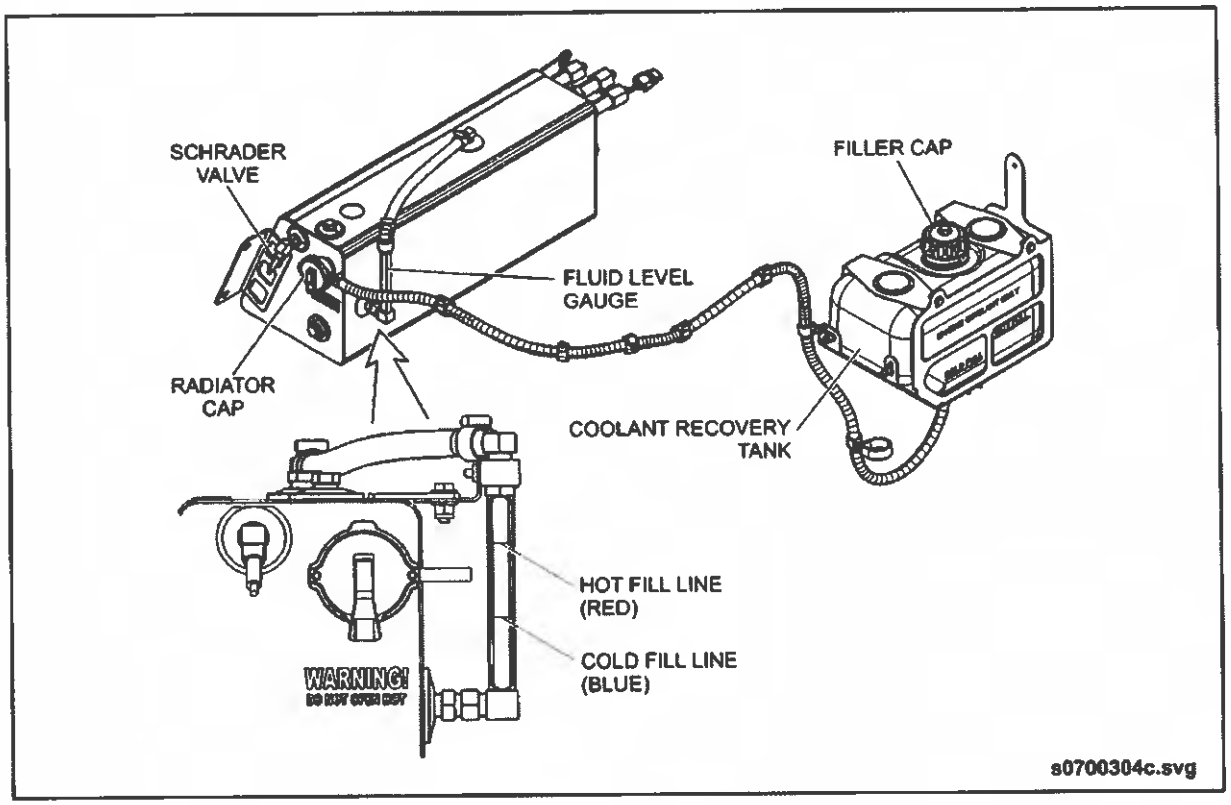

Fig. PM-24: Surge Tank Inspection

The New Flyer vehicles described in this manual may be protected by one or more patents and design applications or registrations in the United States and Canada, and in other countries. Refer to "Vehicle Patent Information" in this manual.
Copyright © 2014 New Flyer Industries Canada ULC

2.12.1.2.Antifreeze

⚠CAUTION

Overconcentration of antifreeze or use of high-silicate antifreeze can cause engine damage. DO NOT use antifreeze concentrations in excess of 60% or less than 40%.

Use only fully formulated coolants meeting ASTM D6210 specification and Cummins Engineering Standard 14603. Refer to 2.33. "Fluid & Lubrication Guide" on page 86 in this section for coolant specification.

Antifreeze broadens the operating temperature range by lowering the coolant freezing point and raising the boiling point. The corrosion inhibitors protect cooling system components from corrosion and prolong component life.

Use a Refractometer to provide a reliable and accurate measurement of freeze point protection and glycol (antifreeze) concentration. Use pre-mixed anti-freeze of 50% distilled water and 50% ethylene glycol to provide year-round protection of -26°F (-32°F).

☞NOTE:

Fleetguard Refractometer, part number CC2806 can be ordered through Cummins Filtration.

Antifreeze should also be checked, on a yearly basis, for contamination such as oil, fuel, grease, solder bloom, silica gel, rust, or scaling. Coolant must be replaced and cooling system cleaned and flushed if contamination is evident. Refer to Section 6 of this manual for basic cleaning and flushing procedures. Also refer to Cummins Operation and Maintenance Manual and Cummins Coolant Requirements and Maintenance Bulletin 3666132 for detailed cleaning and flushing procedures.

☞NOTE:

Fleetguard Coolant Test Strips can be used to check Sulfate and Chloride levels and can be ordered through Cummins Filtration.

2.12.1.3.Supplemental Coolant Additives

⚠CAUTION

Failure to maintain the required SCA concentration level can cause engine damage. DO NOT use sealing additives or soluble oils in the cooling system.

☞NOTE:

The coolant used in this vehicle is a fully formulated coolant that contains buffering compounds, corrosion inhibitors, and provides liner pitting and scale protection but does not eliminate the need for additive replenishment.

SCA concentration levels must be monitored on a regular basis and maintained between 1.5 and 3.0 units/gal (US). Target concentration level is 2.5 units/gal.

Use Fleetguard coolant test kit, part number CC2602, to check SCA concentration level. Refer to instructions included with the test kit. Refer also to Cummins Operation and Maintenance Manual and Cummins Coolant Requirements and Maintenance Bulletin 3666132 for correct SCA levels and additional information on coolant additives.

If SCA concentration is less than 1.2 units/gal, install a new fully-charged coolant filter of the correct dosage. Refer to your New Flyer Parts Manual for coolant filter part number.

If SCA concentration is greater than 5.0 units/gal, it will be necessary to remove existing coolant filter and replace with a chemical free filter until SCA levels drop to the recommended levels.

The New Flyer vehicles described in this manual may be protected by one or more patents and design applications or registrations in the United States and Canada, and in other countries. Refer to "Vehicle Patent Information" in this manual.
Copyright © 2014 New Flyer Industries Canada ULC

2.12.1.4.Cooling System Components

1. Check hose connections and tighten clamps as necessary. Cracked, swollen or deteriorated hoses must be replaced.
2. Check radiator and charge air cooling cores for leaks and for accumulation of dirt which obstructs air passage. As required, operate the fan reverse button on the engine gauges panel to assist in removing debris from the cores. Repair all cooling system leaks immediately. See "Fig. PM-25: Radiator Inspection" on page 51.

⚠CAUTION

DO NOT use excessive pressure or place washer wand within close proximity to radiator/CAC core when power washing otherwise damage to the fins could result. Use a pressure of less than 1200 psi to power wash and maintain a minimum distance of 9 inches from the cores. DO NOT direct power wash at product or safety labels.

⚠CAUTION

The use of steam cleaning or pressure washing equipment can force moisture into electrical connectors and cause corrosion of the terminals Avoid directing high pressure spray toward any electrical connectors.

3. Clean the exterior of the radiator from the engine compartment side on an "as required" basis. Use power wash equipment at reduced pressures, not exceeding 1200 psi, and maintain a safe distance, no closer than 9 inches from the heat exchanger.
4. Clean the exterior of the radiator from the streetside of the vehicle on an "as required" basis. Close the screened radiator door and maintain a minimum distance of 12 inches between the wand of the pressure washing equipment and the screened door. Reduce power washing equipment to not exceed 1200 psi.
5. Inspect the radiator mountings and tighten mounting bolts when necessary.

☞NOTE:

If the radiator cannot be satisfactorily cleaned to provide proper airflow across the core, then the unit will need to be removed from the vehicle for soaking and cleaning. Refer to 2.26. "Two Year Preventive Maintenance" on page 77 *in this section for cleaning and flushing procedure.*

6. Inspect for clearance between fan blades and radiator core and fan shroud.
7. Inspect air recirculation seals at baffles around radiator assembly. Seals must be in good condition.
8. Inspect fan blades for cracks, broken tips, or other damage.
9. Inspect charge air cooler hoses and piping for leaks, holes, cracks, or loose connections.
10. Inspect the fan main harness and system controller electrical connectors to ensure they are clean and properly connected. Ensure harness is properly routed and secured. Open the connectors and inspect terminals for dirt or corrosion. Clean as necessary with contact cleaner and a stiff bristle brush. Reapply a small amount Dow Corning DC4 dielectric grease on the top of the female connector and reconnect.
11. Repair or replace any defective part. Refer to Section 6 of this manual for procedure.

The New Flyer vehicles described in this manual may be protected by one or more patents and design applications or registrations in the United States and Canada, and in other countries. Refer to "Vehicle Patent Information" in this manual.
Copyright © 2014 New Flyer Industries Canada ULC

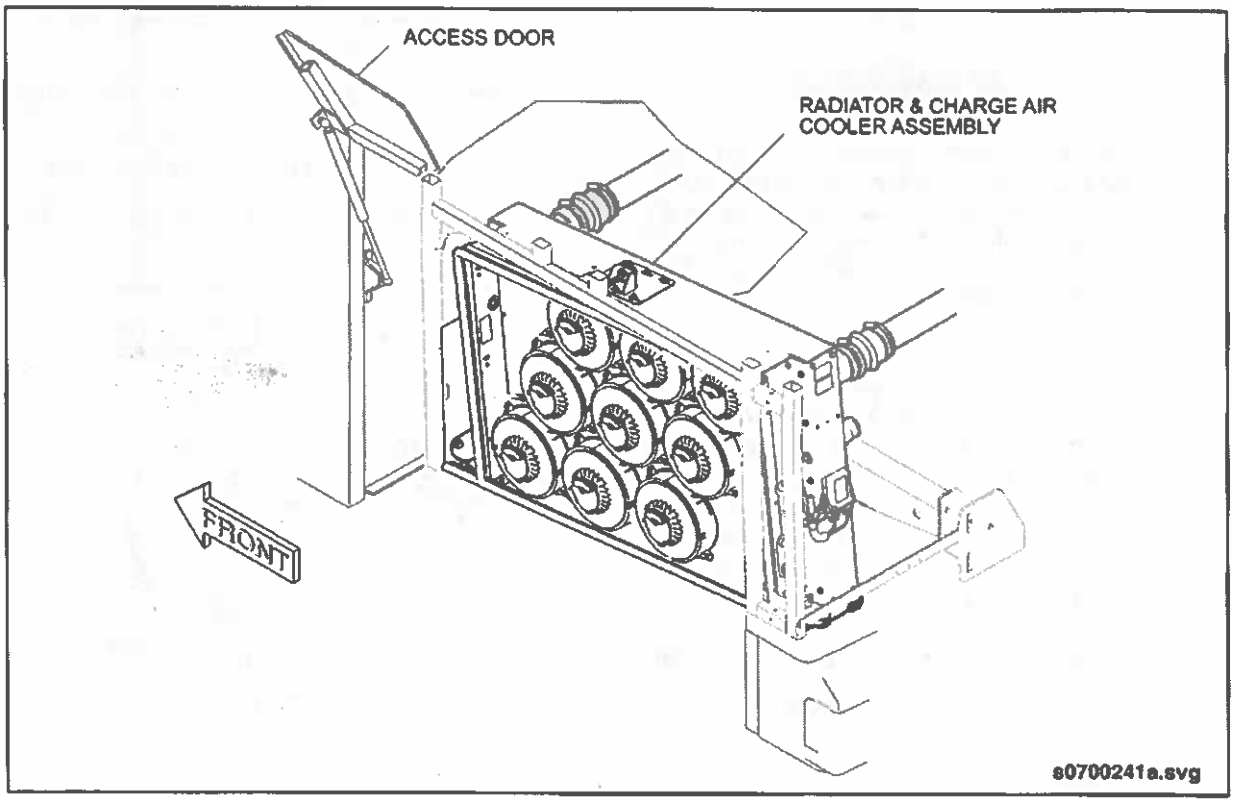

Fig. PM-25: Radiator Inspection

2.12.2. Cooling System Pressure Test

⚠WARNING

DO NOT attempt to open the filler cap on the surge tank or remove the pressure cap until the system has cooled down and the pressure relief valve has been operated. Opening the filler or pressure cap with pressurized hot coolant can result in scalding injury and loss of coolant.

Perform a cooling system pressure test every 15,000 miles (24,000 km) as follows:

1. Pressure test the cooling system at 15 to 20 psi (103 to 138 kPa) using a commercially available pressure tester. Maintain pressure for one minute while observing gauge reading. If pressure reading drops check for source of leak and repair as necessary.
2. Pressure test radiator cap at 12 to 15 psi (83 to 103 kPa) and ensure that it maintains pressure. Increase pressure until the pressure relief actuates. Pressure relief should occur at approximately 16 psi. Also inspect the vacuum relief valve on the underside of the cap to ensure that it functions.

The New Flyer vehicles described in this manual may be protected by one or more patents and design applications or registrations in the United States and Canada, and in other countries. Refer to "Vehicle Patent Information" in this manual.
Copyright © 2014 New Flyer Industries Canada ULC

2.12.3. Coolant Filter Replacement

⚠WARNING

DO NOT attempt to change the coolant filter until the system has cooled down and the pressure relief valve has been operated. Servicing the coolant filter with pressurized hot coolant can result in scalding injury.

☞NOTE:

If it is necessary for any reason to drain the cooling system before an element change, the treated water should be saved and reused. If the treated water is discarded, a new filter element must be installed since the protective agents in the used filter will have been partially consumed in treating the discarded water.

1. Close the coolant filter inlet and outlet valves. See "Fig. PM-26: Coolant Filter" on page 52.
2. Remove the spin-on filter element using a filter wrench.
3. Lubricate seal on new filter element with clean engine oil.
4. Ensure filter base is clean and install filter element.
5. Tighten filter in accordance with instructions provided on filter.
6. Open the coolant filter inlet and outlet valves.
7. Start engine and check for coolant leaks.
8. Check coolant level and top up if necessary.

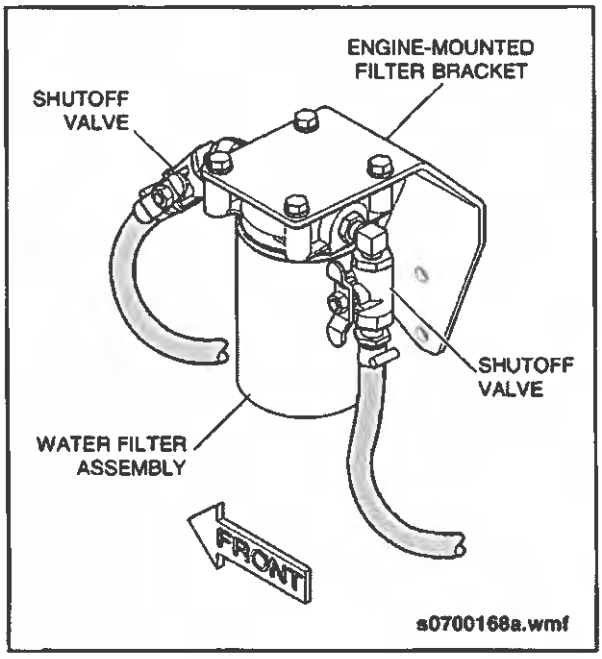

Fig. PM-26: Coolant Filter

The New Flyer vehicles described in this manual may be protected by one or more patents and design applications or registrations in the United States and Canada, and in other countries. Refer to "Vehicle Patent Information" in this manual.
Copyright © 2014 New Flyer Industries Canada ULC

2.13. 18,000 Miles (29,000 km) Preventive Maintenance

2.13.1. Engine Mounts

Every 18,000 miles (29,000 km) inspect the front and rear engine rubber mounts for the following conditions:

- ☐ Cracks
- ☐ Material separation
- ☐ Loose or damaged fasteners

Replace mounts which show any of these signs of damage. Replace damaged fasteners. Retorque loose fasteners. Refer to Section 4 of this manual for correct torque specifications.

2.13.2. Power Steering Filter

Replace the power steering filter, located in the hydraulic reservoir, every 18,000 miles (29,000 km) or every six months, whichever occurs first.

Dispose of used filter, any spilled hydraulic fluid and used shop rags in an environmentally responsible manner. Start engine and check filter installation for leaks before operating vehicle. Refer to Section 3 of this manual for further information on the reservoir and filter. See "Fig. PM-27: Hydraulic Filter Replacement" on page 53.

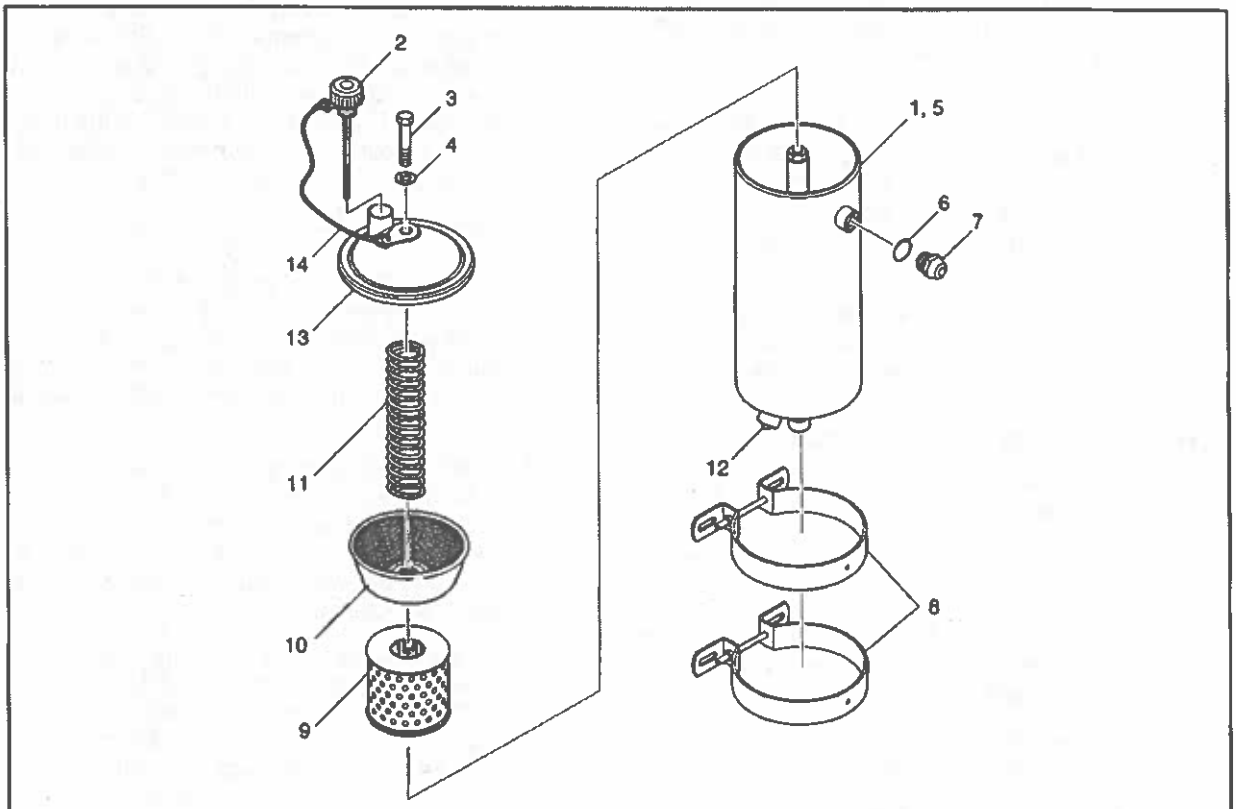

1. Reservoir Assembly, Power Steering (Incl. 2...14)
2. Dipstick
3. Bolt
4. Washer
5. Body
6. O-Ring, Glass
7. Glass, Sight
8. Bracket, Mounting
9. Element, Filter
10. Basket
11. Spring, Retaining
12. Plug, 1/2" PT
13. Cover Assembly
14. Lanyard Assembly

Fig. PM-27: Hydraulic Filter Replacement

The New Flyer vehicles described in this manual may be protected by one or more patents and design applications or registrations in the United States and Canada, and in other countries. Refer to "Vehicle Patent Information" in this manual.
Copyright © 2014 New Flyer Industries Canada ULC

2.14. 24,000 Miles (38,600 km) Preventive Maintenance

2.14.1. Air Dryer

⚠CAUTION

DO NOT inject alcohol, anti-freeze, or other de-icing substances into or upstream of the air dryer. Use of these substances may damage the air dryer and void warranty.

Perform the following maintenance every 24,000 miles (38,000 km), 900 operating hours, or every three months, whichever occurs first:

1. Visually inspect the air dryer for physical damage such as chaffed or broken air and electrical lines and broken or missing parts.
2. Check all mounting bolts for tightness. Torque the 3/8" lock nuts on the upper and lower mounting brackets to 270 to 385 in-lbs. (31 to 43 Nm). Torque the 5/16" nut on the upper clamp ring to 60 to 100 in-lbs (7 to 11 Nm)
3. Perform Operation & Leakage Tests. Refer to 2.14.1.1. "Operation & Leakage Tests" on page 54 in this section for procedure.

2.14.1.1. Operation & Leakage Tests

1. Test the delivery port check valve assembly as follows:
   a. Install a test gauge in the supply line to the wet tank.
   b. Ensure all lines and fittings leading to and from the air dryer are in good condition and not leaking.
   c. Build up system air pressure to governor cutout (125 psi).
   d. Observe the test gauge to ensure system pressure is maintained. If a rapid loss of pressure is indicated, proceed to the following steps to confirm source of leak.
   e. Confirm cause of rapid pressure loss by shutting down the engine and draining system pressure to a point below governor cut-in (less than 105 psi). Drain residual air pressure in the compressor discharge line and remove the discharge line at the supply port of the air dryer. Ensure there is no air pressure at the control port by disconnecting the line from the governor unload (UNL) port.
   f. Apply a soap solution to the air supply port on the air dryer. If a 1" bubble forms within one second, then the delivery check valve should be repaired.
   g. Remove the test gauge before returning the vehicle to service.
2. Check for excessive leakage around the purge valve. With the compressor in loaded mode (compressing air), apply a soap solution to the purge valve exhaust port and observe that leakage does not exceed a 1" bubble in 1 second. If the leakage exceeds the maximum specified, repair the purge valve assembly.
3. Close all reservoir drain cocks. Build up system pressure to governor cutout and note that each unit purges with an audible escape of air. Apply the service brakes to reduce system air pressure to governor cut-in. Note that the system once again builds to full pressure and is followed by a purge cycle from each unit.
4. Check the operation of the safety valve by pulling the exposed stem while the compressor is loaded (compressing air). There must be an exhaust of air while the stem is held and the valve should reseat when the stem is released.
5. Check the operation of the end cover heater and thermostat assemblies during cold weather operation. Refer to 2.14.1.2. "Electric Power Test" on page 55 and Refer to 2.14.1.3. "Thermostat & Heater Operation" on page 55 in this section for procedure.

The New Flyer vehicles described in this manual may be protected by one or more patents and design applications or registrations in the United States and Canada, and in other countries. Refer to "Vehicle Patent Information" in this manual.
Copyright © 2014 New Flyer Industries Canada ULC

2.14.1.2.Electric Power Test

With the Master Run switch set to the DAY-RUN or NIGHT-RUN operating position, check for voltage to the heater and thermostat assembly using a voltmeter or test light. Unplug the electrical connector at the air dryer and place the test leads on each of the pins of the male connector. If there is no voltage, look for a blown fuse, broken wires, or corrosion in the vehicle wiring harness. Check to see if a good ground path exists.

2.14.1.3.Thermostat & Heater Operation

☞NOTE:

These tests are not required except in cold weather operation.

Switch off the master run switch and cool the thermostat and heater assembly to below 40°F (4°C). Using an ohmmeter, check the resistance between the electrical pins in the air dryer connector half. The resistance should be 1.5 to 3.0 ohms for the 12 volt heater assembly. Warm the thermostat and heater assembly to over 90°F (32°C) and again check the resistance. The resistance should exceed 1000 ohms. If the resistance values obtained are within the stated limits, the assembly is operating properly. If the resistance values obtained are outside the stated limits, replace the assembly.

☞NOTE:

If, after completing the routine operation and leakage tests, it has been determined that one or more components of the air dryer requires replacement or maintenance, refer to your New Flyer Parts Manual. The air dryer has been designed so that any of the maintenance kits can be installed without removing the air dryer from the vehicle.

The New Flyer vehicles described in this manual may be protected by one or more patents and design applications or registrations in the United States and Canada, and in other countries. Refer to "Vehicle Patent Information" in this manual.
Copyright © 2014 New Flyer Industries Canada ULC

2.14.2. Adjustable Floor Pedal (AFP) System

Perform the following maintenance every 24,000 miles (38,600 km), 3 months, or 900 operating hours, whichever occurs first. See "Fig. PM-28: Adjustable Floor Pedal System Inspection" on page 58.

☞NOTE:

This maintenance interval may need to be adjusted to suit the specific operating conditions and geographic location. Exposure to slush, salt, and/or sand will require more frequent inspection. If the unit is subjected to spray or pressure washing, then it will be necessary to relubricate immediately following cleaning.

1. Inspect in and around the pedal system and clean any accumulated dirt, gravel, or debris away from the pedal system.
2. Check the pedal adjustment system operation as follows:
   a. Operate the pedal adjustment switch, located on the driver's side console, over the full forward and aft range of movement. Operation should be smooth and quiet.
   b. If the system is sluggish or does not operate smoothly, then the slide rods and lead screw will need to be cleaned and lubricated with Dow Corning Molykote MI-60 or equivalent grease.
   c. If pedal movement is still unsatisfactory, then the motor will likely require replacement. Refer to Section 19 of this manual for replacement procedure.
3. Inspect the brake treadle pivot pin, located at the base of the treadle, as follows:
   a. Lift up on the brake treadle and allow it fall back to its resting position. Repeat this action several times to ensure the treadle falls freely without binding.
   b. If brake treadle does not move freely on pivot pin, then remove safety clip and slide the pivot pin out of the carrier.
   c. Inspect pivot pin for any sign of wear. Replace pin if worn.

⚠WARNING

If any wear is noted on the pivot pin or pivot pin holes, then the pivot pin and/or brake treadle must be replaced. Worn parts can lead to a sticking or binding condition of the brake treadle.

   d. Inspect pivot pin holes in brake treadle and flanged bushings in carrier for wear or elongation. Replace brake treadle and/or carrier bushings if pivot holes are worn. Refer to Section 19 of this manual for replacement procedure.
   e. Clean and lubricate pivot pin and reinstall with new safety clip. Refer to Section 19 of this manual for replacement procedure.

The New Flyer vehicles described in this manual may be protected by one or more patents and design applications or registrations in the United States and Canada, and in other countries. Refer to "Vehicle Patent Information" in this manual.
Copyright © 2014 New Flyer Industries Canada ULC

4. Inspect the pivot point on the brake treadle moveable arm as follows:
   a. Lift and hold the brake treadle in the fully raised position.
   b. Locate the moveable arm underneath the brake treadle.
   c. Lift up on the moveable arm and allow it fall back to its resting position. Repeat this action several times to ensure the arm falls freely without binding
   d. If moveable arm does not move freely on pivot pin, then remove safety clip and slide the pivot pin out of the moveable arm.
   e. Inspect pivot pin for any sign of wear. Replace pin if worn.

⚠WARNING

If any wear is noted on the pivot pin or pivot pin holes, then the pivot pin and/or moveable arm must be replaced. Worn parts can lead to a sticking or binding condition of the brake treadle.

   f. Inspect pivot pin holes in brake treadle and flanged bushings in moveable arm for wear or elongation. Replace brake treadle and/or arm bushings if pivot holes are worn. Refer to Section 19 of this manual for replacement procedure.
   g. Clean and lubricate pivot pin and reinstall with new safety clip.

5. Inspect the brake valve plunger as follows:
   a. Remove brake valve plunger. Refer to Section 19 of this manual for removal procedure.
   b. Inspect the plunger seal for cracks, tears, holes, or deterioration. Replace plunger seal as required.
   c. Inspect the brake plunger and valve casting bore for wear, scoring, or damage. Replace parts as required.

⚠WARNING

If any wear, scoring, or damage is noted, the brake plunger and/or AFP unit must be replaced. Failure to replace a damaged plunger or valve casting could lead to a sticking condition of the brake control valve.

   d. Lubricate the inside of the valve casting bore and the outside of the brake plunger with Barium grease supplied in the repair kit.

⚠WARNING

DO NOT substitute any other unapproved grease for what has been provided in the service kit.

   e. Reinstall the brake plunger. Refer to Section 19 of this manual for installation procedure.

The New Flyer vehicles described in this manual may be protected by one or more patents and design applications or registrations in the United States and Canada, and in other countries. Refer to "Vehicle Patent Information" in this manual.
Copyright © 2014 New Flyer Industries Canada ULC

6. Operate the accelerator treadle by hand through its full range of movement. Operation should be smooth with no evidence of binding. Replace accelerator treadle if operation is unsatisfactory, Refer to Section 19 of this manual for replacement procedure.
7. Inspect the accelerator and brake treadle rubber overshoe for wear or damage and replace overshoe as required. Refer to Section 19 of this manual for replacement procedure.
8. Inspect the mounting screws for tightness on both the accelerator and brake treadle mounting plates.

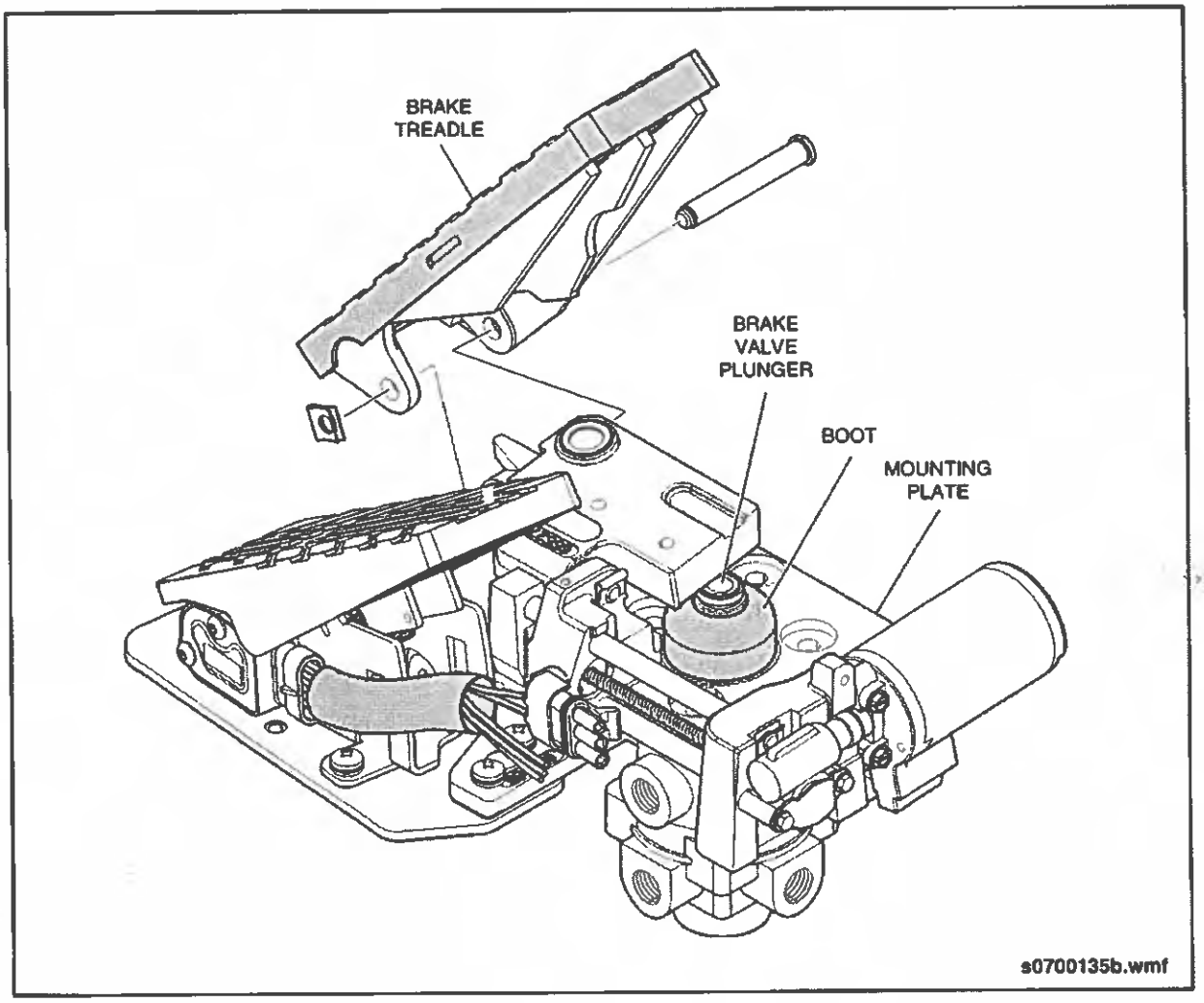

Fig. PM-28: Adjustable Floor Pedal System Inspection

The New Flyer vehicles described in this manual may be protected by one or more patents and design applications or registrations in the United States and Canada, and in other countries. Refer to "Vehicle Patent Information" in this manual.
Copyright © 2014 New Flyer Industries Canada ULC

2.15. 30,000 Miles (48,000 km) Preventive Maintenance

2.15.1. Fuel Tank

Open the drain at the bottom of the Fuel Tank every 30,000 miles (48,000 km) to drain off any water and/or sediment.

2.15.2. Engine Drive Belts

Inspect alternator, water pump, and HVAC belts every 30,000 miles (48,000 km), 1000 hours, or one year, whichever occurs first. Inspect belts for wear, cracks, fraying, glazing, or other damage. Small transverse cracks running across the ribs are acceptable unless intersected by a longitudinal crack running along the length of the belt. Replace the belt if chunks of material are missing or belt is frayed.

☞NOTE:

When replacing with a new belt, ensure that the belt is properly aligned and tensioned. Confirm proper operation of the automatic belt tensioner.

The New Flyer vehicles described in this manual may be protected by one or more patents and design applications or registrations in the United States and Canada, and in other countries. Refer to "Vehicle Patent Information" in this manual.
Copyright © 2014 New Flyer Industries Canada ULC

2.16. 36,000 Miles (58,000 km) Preventive Maintenance

2.16.1. Disc Brake Caliper Inspection

Perform a disc brake caliper inspection every 36,000 miles (58,000 km) or every year, whichever occurs first. A more frequent inspection may be necessary depending on the operating conditions. Perform the following inspections:

- ❒ Inspect the six brake caliper mounting bolts that attach the brake caliper to the axle to ensure the bolts are tight. Refer to Section 1 and 2 of this manual for mounting bolt torque specifications.
- ❒ Caliper Running Clearance - refer to "Brake Pad Clearance Inspection" in Section 1 and 2 of this manual for inspection procedure.
- ❒ Guide Pin Covers - check that the protective covers are properly installed on the caliper guide pins and are in good condition. Replace covers if damaged or missing.
- ❒ Adjuster Cap - check that the protective cap is properly installed on the adjuster and is in good condition. Replace adjuster cap if damaged or missing
- ❒ Brake Disc - refer to "Brake Disc Inspection" in Section 1 and 2 of this manual for inspection procedure.
- ❒ Brake Adjuster - refer to "Automatic Adjustment Inspection" in Section 1 and 2 of this manual for inspection procedure

☞NOTE:

The brake adjuster should always be inspected and tested whenever brake pads have been replaced

- ❒ Caliper Guide Pin - refer to "Caliper Guide Pin Inspection" in Section 1 and 2 of this manual for inspection procedure.
- ❒ Tappet & Boot Assembly - refer to "Tappet Rubber Boot Inspection" in Section 1 and 2 of this manual for inspection procedure.
- ❒ Guide Pin Inner Boot - refer to "Upper Guide Rubber Boot Inspection" in Section 1 and 2 of this manual for inspection procedure.

2.16.2. Rear Axle Oil Change

☞NOTE:

An oil filter is installed inside the axle housing but does not need to be changed unless the differential assembly is being replaced. Refer to Section 2 of this manual for axle housing oil filter replacement procedure.

Use this oil change interval only if operating in a hot temperature region. Refer to 2.2. "Rear Axle Operating Conditions" on page 2 in this section for a definition of a hot temperature region. Refer to 2.33. "Fluid & Lubrication Guide" on page 86 in this section for fluid specification.

2.16.2.1.Drain

⚠CAUTION

Differential fluid can reach operating temperatures in excess of 212°F (100°C). Allow adequate time for differential to cool before draining fluid.

1. Ensure vehicle is parked on a level surface or raised to a working height that maintains a level attitude.
2. Place a suitably sized container beneath the differential gear housing.

☞NOTE:

Differential gear housing oil fill quantity is approximately 4.0 U.S. gallons (15 liters)

3. Remove the fill plug from the front of the differential housing. See "Fig. PM-29: Rear Axle Drain & Fill Locations" on page 61.
4. Remove the drain plug from the bottom of the differential housing and allow the differential to drain completely.

The New Flyer vehicles described in this manual may be protected by one or more patents and design applications or registrations in the United States and Canada, and in other countries. Refer to "Vehicle Patent Information" in this manual.
Copyright © 2014 New Flyer Industries Canada ULC

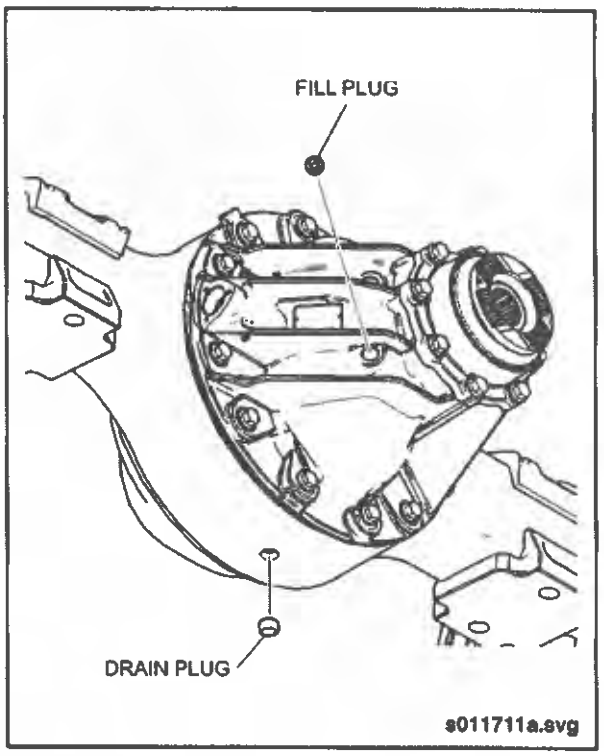

Fig. PM-29: Rear Axle Drain & Fill Locations

2.16.2.2.Fill

1. Inspect the magnetic drain plug for any significant accumulation of metal particles and wipe clean.

   ☞NOTE:

   Fine "fuzz-like" metal particles are considered normal but any solid slivers of significant size or chips of metal will require further investigation to determine cause.

2. Clean and inspect the threads of the drain plug before applying Loctite-567 thread sealant. Install and torque the drain plug to 52 ft-lb. (70 Nm).
3. Add slightly less than 4.0 U.S. gallons (15 liters) and allow fluid level to stabilize.
4. Continue to add fluid slowly until the fluid is level with the bottom of the fill plug.
5. Install the fill plug and torque to 52 ft-lb. (70 Nm).

2.16.3. Power Steering Fluid

Replace the fluid in the hydraulic reservoir every 36,000 miles (58,000 km) or yearly, whichever occurs first. More frequent change intervals may be required if operating under less than ideal conditions. Severe operating conditions involving extremes of moisture, dust and temperature fluctuations may require a more frequent hydraulic fluid change interval. Refer to 2.33. "Fluid & Lubrication Guide" on page 86 in this section for fluid specifications.

The New Flyer vehicles described in this manual may be protected by one or more patents and design applications or registrations in the United States and Canada and in other countries. Refer to "Vehicle Patent Information" in this manual
Copyright © 2014 New Flyer Industries Canada ULC

2.17. 48,000 Miles (77,200 km) Preventive Maintenance

2.17.1. Front End Alignment

Perform minor alignment. Refer to Section 3 of this manual for procedure.

2.17.2. Front & Rear Brake Chambers

2.17.2.1. Front Brake Chambers

Perform the following Inspection every 48,000 miles (77,200 km):

1. Visually inspect the exterior surfaces of the brake chamber for signs of damage. Replace the brake chamber if damaged. Refer to Section 1 of this manual for replacement procedure.
2. Apply system pressure (minimum 100 psi) to the brake chamber and check for leaks around the circumference of the clamp band and air inlet fittings, using soapy water or leak detection solution.
   a. If bubbles appear around clamp band, release air pressure and torque clamp band nuts to 30 to 35 ft-lbs (41 to 47 Nm). Recheck for leaks. If leaks continue, replace the brake chamber.
   b. If bubbles appear at air inlet fittings, tighten fittings until leaks cease, but do not exceed 25 to 30 ft-lb. (34 to 41 Nm) torque for 3/8 - 18 NPTF fittings or 13 to 15 ft-lb. (18 to 20 Nm) for M16 x 1.5 -6H fittings. If leaks continue, release air pressure and remove air lines from inlet ports. Repair or replace hose and fittings as required Reinstall air lines to the brake chamber and recheck for leaks.
3. Check to ensure the mounting stud nuts are torqued to 133 to 155 ft-lb. (180 to 210 Nm).

The New Flyer vehicles described in this manual may be protected by one or more patents and design applications or registrations in the United States and Canada, and in other countries. Refer to "Vehicle Patent Information" in this manual.
Copyright © 2014 New Flyer Industries Canada ULC

2.17.2.2.Rear Brake Chambers

Perform the following inspection every 48,000 miles (77,200 km):

1. Visually inspect the exterior surfaces of the spring brake chamber for signs of damage. Replace the brake chamber if damaged. Refer to Section 2 of this manual for replacement procedure.
2. Apply system pressure (minimum 100 psi) to the spring brake chamber and check for leaks at the head/flange case interface, air inlet fittings, at vent elbows in non-pressure housing, and center seal using soapy water or leak detection solution.
   a. If bubbles appear at the head/flange case interface, a leak is present and the spring brake chamber must be replaced.
   b. Check for leaks from the vent elbow located in the non-pressure housing. If more than one vent elbow is present, plug all but one elbow and check for leaks at the unplugged elbow. If leaks are detected, there is an internal leak and the spring brake chamber needs to be replaced.
   c. For center seal leaks, check for continuous discharge from the service side quick release valve. If a leak is present, the brake chamber must be replaced.
   d. If bubbles appear at air inlet fittings, tighten fittings until leaks cease, but do not exceed 25 to 30 ft-lb. (34 to 41 Nm) torque for 3/8 - 18 NPTF fittings or 13 to 15 ft-lb. (18 to 20 Nm) for M16 x 1.5 -6H fittings. If leaks continue, exhaust all air from spring side of the chamber. Remove air lines from inlet ports. Repair or replace hose and fittings as required. Reinstall air lines to brake chamber and check for leaks.
3. With spring brake still fully pressurized, apply system pressure (minimum 100 psi) to the service brake chamber and check for leaks around the circumference of the clamp band and air inlet fittings, using soapy water or leak detection solution.
   a. If bubbles appear around clamp band, release air pressure and torque clamp band nuts to 30 to 35 ft-lb. (41 to 47 Nm). Recheck for leaks. If leaks continue, replace the brake chamber.
   b. If bubbles appear at air inlet fittings, tighten fittings until leaks cease, but do not exceed 25 to 30 ft-lb. (34 to 41 Nm) torque for 3/8 - 18 NPTF fittings or 13 to 15 ft-lb. (18 to 20 Nm) for M16 x 1.5 -6H fittings. If leaks continue, exhaust all air from service side of the chamber. Remove air lines from inlet ports. Repair or replace hose and fittings as required. Reinstall air lines to the brake chamber, and recheck for leaks
4. Check to ensure the mounting stud nuts are torqued to 133 to 155 ft-lb. (180 to 210 Nm).

⚠CAUTION

DO NOT use an impact wrench to tighten the release bolt in the following step.

5. Check to ensure that the release bolt is seated against the head insert and torqued to 50 to 60 ft-lb. (68 to 81 Nm). Fully seating the release bolt ensures that the parking brake will have full stroke capability and seals the release bolt threads, preventing contaminants from entering the brake chamber.
6. Check the external breather tube to ensure there is no damage or cracks in the rubber elbows and ensure the tube is securely engaged a minimum of ½ inch (13 mm) into the rubber elbows and glued together with a high quality rubber cement. Replace with breather tube repair kit if required.

The New Flyer vehicles described in this manual may be protected by one or more patents and design applications or registrations in the United States and Canada, and in other countries. Refer to "Vehicle Patent Information" in this manual.
Copyright © 2014 New Flyer Industries Canada ULC

2.18. 54,000 Miles (87,000 km) Preventive Maintenance

2.18.1. Rear Axle Oil Change

Use this oil change interval only if operating in a moderate temperature region. Refer to 2.2. "Rear Axle Operating Conditions" on page 2 in this section for a definition of a moderate temperature region. Refer to 2.16.2. "Rear Axle Oil Change" on page 60 in this section for oil change drain and fill procedure. Refer to 2.33. "Fluid & Lubrication Guide" on page 86 in this section for fluid specification.

2.19. 60,000 Miles (96,000 km) Preventive Maintenance

2.19.1. Fuel Tank

Every 60,000 miles (96,000 km) or twelve months, whichever comes first, tighten all fuel tank mountings and brackets. At the same time, check the seal in the fuel tank cap, the breather hole in the cap, and the condition of the flexible fuel lines. Repair or replace the parts as necessary.

2.19.2. Air Compressor Discharge Lines

Inspect the air compressor discharge lines for carbon buildup every 60,000 miles (96,000 km), 2,000 operating hours or two years. If the total deposit in a cross-section of the line exceeds 1/16", clean the line, and inspect and clean the air compressor cylinder head and valve assembly. Refer to Section 8 of this manual for procedure.

2.19.3. Crankcase Breather Element

Replace the crankcase breather element every 60,000 miles (96,000 km) or 2,000 hours, whichever occurs first.

2.19.3.1. Removal

1. Set the Battery Disconnect switch to the OFF position.
2. Steam clean the crankcase breather cover area and dry with compressed air.
3. Remove the eleven bolts that attach the crankcase breather cover to the crankcase breather base. See "Fig. PM-30: Crankcase Breather" on page 64.

☞NOTE:

The six bolts that attach the breather base to the valve cover do not need to be removed.

4. Remove the breather cover.
5. Remove the breather element from the breather base and discard.

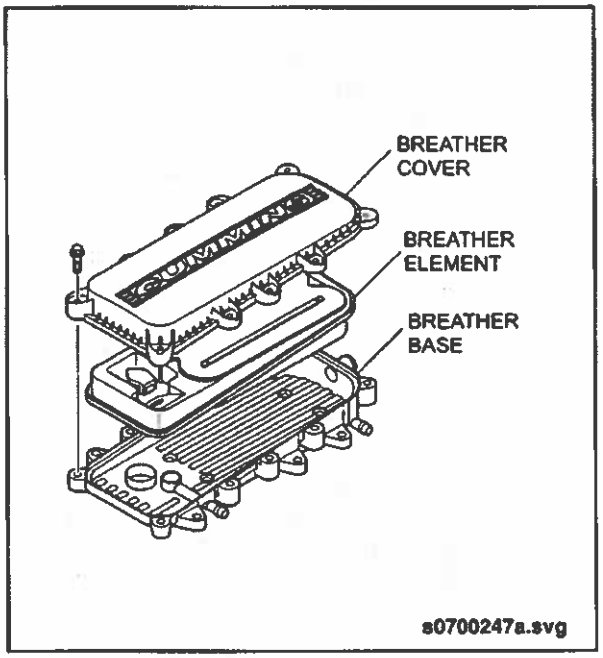

Fig. PM-30: Crankcase Breather

The New Flyer vehicles described in this manual may be protected by one or more patents and design applications or registrations in the United States and Canada, and in other countries. Refer to "Vehicle Patent Information" in this manual.
Copyright © 2014 New Flyer Industries Canada ULC

2.19.3.2.Inspection & Cleaning

1. Inspect the breather cover and base for cracks or other damage.
2. Clean any debris or sludge buildup from inside the breather cover and base. Be careful not to allow debris or cleaning fluid to enter the crankcase when cleaning the breather base.

2.19.3.3.Installation

1. Lubricate the O-ring on the new breather element with engine oil.
2. Install the new breather element onto the breather base.
3. Install the breather cover using eleven bolts. Torque bolts to 44 in-lb. (5 Nm) in the sequence shown. See "Fig. PM-31: Breather Cover Torque Sequence" on page 65.

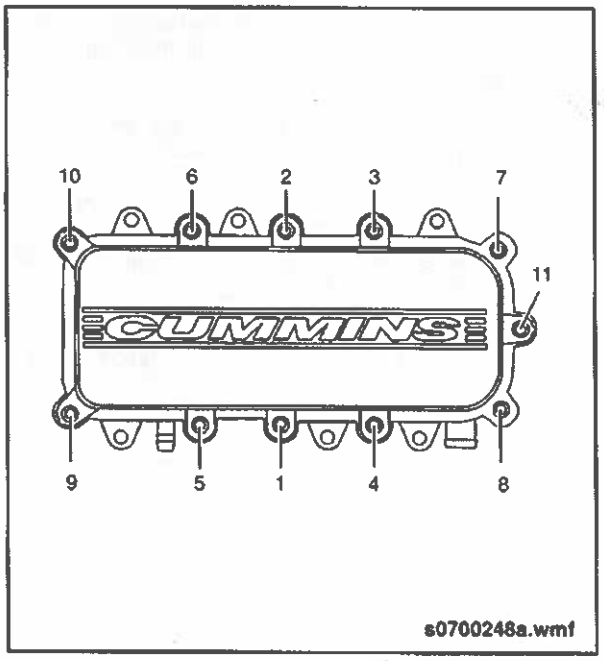

Fig. PM-31: Breather Cover Torque Sequence

2.20. 75,000 Miles (120,700 km) Preventive Maintenance

2.20.1. Transmission Filters

⚠CAUTION

Fluid and filter change frequency is determined by the severity of transmission service. More frequent changes may be necessary if the operating conditions create high levels of contamination or overheating. Perform an oil analysis to determine proper change interval if there is any question as to the severity of the transmission duty cycle. Refer to Allison Service Manual and Allison Service Tip #1099 for more information on oil analysis and recommended change intervals.

☞NOTE:

Refer to Allison Service Manual and Allison Service Tips #1099 for more information on fluid and filter change intervals and fluid contamination.

Change both filters every 75,000 miles (120,000 km), 3,000 hours, or 36 months and top up fluid. Refer to 2.22. "150,000 Miles (241,400 km) Preventive Maintenance" on page 66 in this section for procedure.

2.21. 96,000 Miles (154,500 km) Preventive Maintenance

2.21.1. Front End Alignment

Perform major alignment. Refer to Section 3 of this manual for procedure.

The New Flyer vehicles described in this manual may be protected by one or more patents and design applications or registrations in the United States and Canada, and in other countries. Refer to "Vehicle Patent Information" in this manual.
Copyright © 2014 New Flyer Industries Canada ULC

2.22. 150,000 Miles (241,400 km) Preventive Maintenance

2.22.1. Transmission Fluid

⚠CAUTION

Fluid and filter change frequency is determined by the severity of transmission service. More frequent changes may be necessary if the operating conditions create high levels of contamination or overheating. Perform an oil analysis to determine proper change interval if there is any question as to the severity of the transmission duty cycle. Refer to Allison Service Manual and Allison Service Tip #1099 for more information on oil analysis and recommended change intervals.

☞NOTE:

Refer to Allison Service Manual and Allison Service Tips #1099 for more information on fluid and filter change intervals and fluid contamination.

Change both filters every 75,000 miles (120,000 km), 3,000 hrs., or 36 months and top up fluid. Change the fluid every 150,000 miles (240,000 km), 6,000 hrs., or 48 months. See "Fig. PM-32: Transmission Oil Filters" on page 67.

☞NOTE:

The transmission should be at the operating temperature of 160 to 200°F (71 to 93°C) when the oil is drained. This will ensure quicker and better drainage. Check oil for contamination. Refer to Section 5 of this manual if contamination exists.

1. Remove the drain plug from the control module and allow the oil to drain. Check the condition of the oil per Section 5 of this manual.
2. To remove filters, remove twelve bolts, two filter covers, two O-rings, two square cut seals and two filters.
3. To install filters, prelube and install the two O-rings, two square cut seals followed by the filters (lube O-ring on cover and in filter cartridge only) onto the filter covers.
4. Index each filter/cover assembly to the holes in the channel plate/sump. Push cover assembly to seat seals (do not use bolts to draw cover to sump: this can damage cover/seal/sump).
5. Install six bolts into each cover and tighten to 42 to 50 ft-lb. (57 to 68 Nm).
6. Inspect the drain plug(s) O-ring and replace if necessary. Reinstall the 0.750 - 16 UNF - 2A drain plug(s) and tighten to 18 to 24 ft-lb. (25 to 32 Nm).
7. Fill transmission with new oil. Refer to Section 5 of this manual for required quantities.

The New Flyer vehicles described in this manual may be protected by one or more patents and design applications or registrations in the United States and Canada, and in other countries. Refer to "Vehicle Patent Information" in this manual.
Copyright © 2014 New Flyer Industries Canada ULC

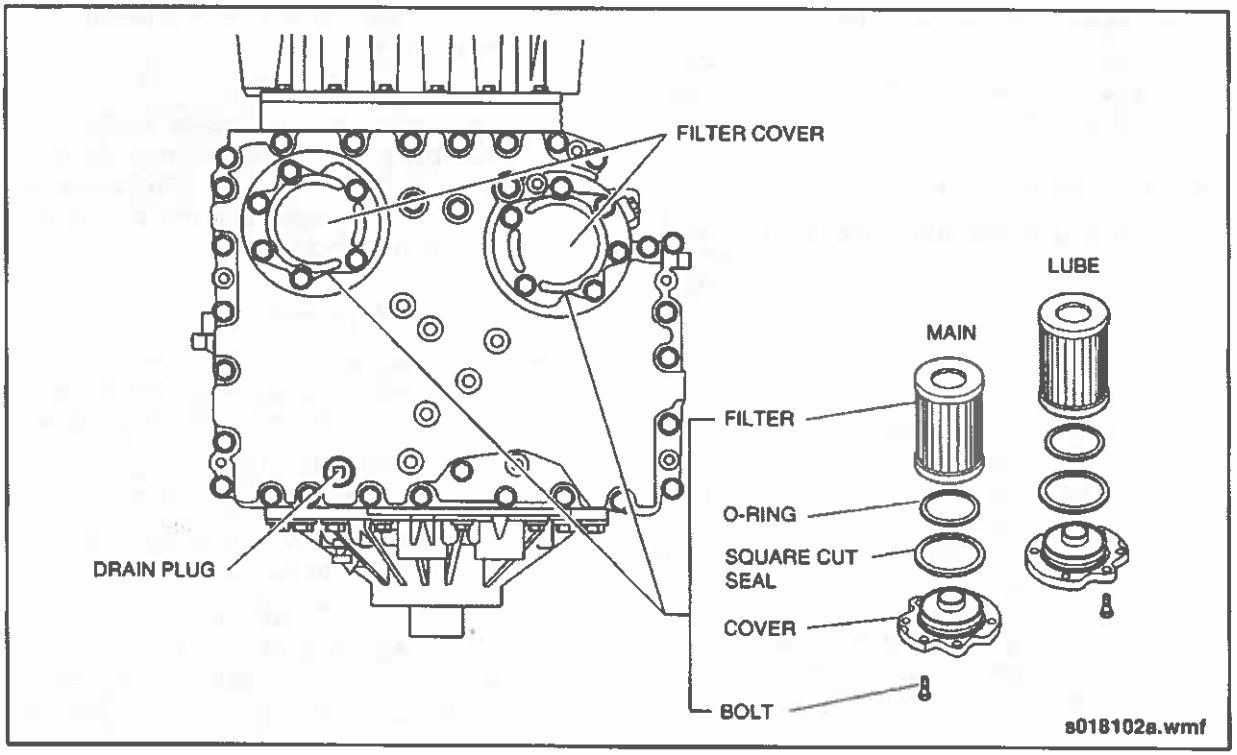

Fig. PM-32: Transmission Oil Filters

2.23. 200,000 Miles (321,000 km) Preventive Maintenance

2.23.1. Muffler Particulate Filter

Every 200,000 miles or 6,500 operating hours remove the muffler particulate filter and send it to an authorized Cummins repair location for cleaning or replacement. Specialized cleaning equipment is required to perform this maintenance. Refer to Section 4 of this manual for further information on this equipment and the removal procedure for the muffler and the particulate filter.

The New Flyer vehicles described in this manual may be protected by one or more patents and design applications or registrations in the United States and Canada, and in other countries. Refer to "Vehicle Patent Information" in this manual.
Copyright © 2014 New Flyer Industries Canada ULC

2.23.2. Diesel Exhaust Fluid Filter

Replace the diesel exhaust fluid filter every 200,000 miles (321,000 km) or 6,500 operating hours, whichever occurs first.

2.23.2.1. Removal

1. Set the Master Run switch to the STOP-ENGINE position and allow at least 5 minutes for the purge cycle to complete before servicing the filter.

☞NOTE:

The purge cycle occurs automatically following vehicle shut down and will pump all fluid from the lines back into the tank. The dosing module, located on the Selective Catalyst Reduction (SCR) device will emit an audible pumping sound throughout the purge cycle.

2. Set the Battery Disconnect switch to the OFF position once the purge cycle is completed.
3. Locate the filter housing on the bottom of the SCR Supply Module, Inspect the area around the seal and vent of the filter cap for signs of leakage. See "Fig. PM-33: Diesel Exhaust Fluid (DEF) Filter" on page 69.

☞NOTE:

Diesel exhaust fluid leaks leave a white deposit. If deposits are found, inspect components for defects. Refer to 2.23.2.2. "Cleaning & Inspection" on page 68 *in this section for inspection requirements.*

4. Unscrew the diesel exhaust fluid filter cap.

☞NOTE:

There may be residual diesel exhaust fluid in the filter housing. Place a container below the diesel exhaust fluid filter cap to catch any spillage.

5. Remove and discard the equalizing element and filter element.

☞NOTE:

Examine the filter elements for evidence of contamination prior to discarding the element. Refer to 2.23.2.2. "Cleaning & Inspection" on page 68 *in this section for inspection procedure.*

2.23.2.2.Cleaning & Inspection

1. Inspect the diesel exhaust filter for debris or contamination using visual and aromatic indicators. If debris is evident, also check:

- ❒ Diesel exhaust fluid tank pick up screen. Refer to Cummins Service Manual.
- ❒ The dosing unit inlet connector Refer to Cummins Service Manual.

☞NOTE:

Refer to "Contamination/Incorrect Fluid" in Section 4 of this manual for flushing procedures. Also refer to Cummins Service Manual for additional information on contaminated diesel exhaust fluid.

2. Clean the filter cap with warm water and a clean cloth.
3. Inspect the filter cap for cracks or holes that could create a diesel exhaust fluid leak path.
4. Check the condition of the threads on the filter cap. Replace the filter cap if thread damage is evident.
5. Inspect the threads of the filter housing on the SCR Supply Module. This is especially important if the filter cap was damaged. Replace the entire SCR Supply Module if thread damage is evident.

The New Flyer vehicles described in this manual may be protected by one or more patents and design applications or registrations in the United States and Canada, and in other countries. Refer to "Vehicle Patent Information" in this manual.
Copyright © 2014 New Flyer Industries Canada ULC

2.23.2.3.Installation

☞NOTE:

Lubrication of the diesel exhaust fluid filter o-rings is not required.

1. Slide the diesel exhaust fluid filter equalizing element into the diesel exhaust fluid filter cartridge.
2. Insert the filter assembly into the housing of the SCR module.
3. Install the filter cap and torque to 177 in-lb. (2.0 Nm).

⚠CAUTION

NEVER operate the vehicle with the filter cap removed.

4. Start the vehicle and check for leaks.

☞NOTE:

The aftertreatment diesel exhaust fluid dosing system will not prime until the correct SCR temperatures are reached. To verify that there are no diesel exhaust fluid leaks, initiate a stationary regeneration to get the SCR system up to temperature.

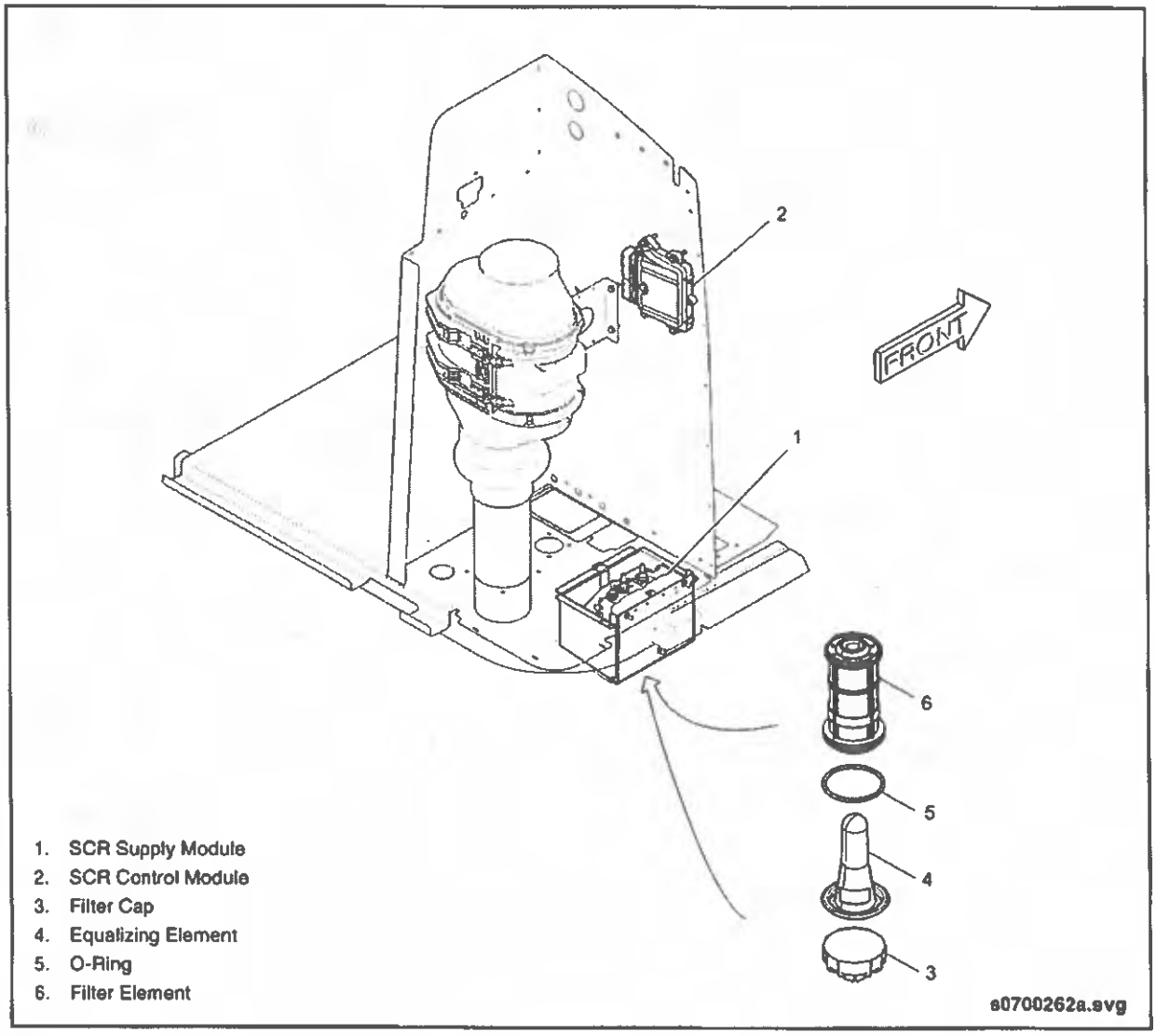

Fig. PM-33: Diesel Exhaust Fluid (DEF) Filter

The New Flyer vehicles described in this manual may be protected by one or more patents and design applications or registrations in the United States and Canada, and in other countries. Refer to "Vehicle Patent Information" in this manual.
Copyright © 2014 New Flyer Industries Canada ULC

2.24. Six Month Preventive Maintenance

2.24.1. D-2 Governor

Perform an operating and leakage test every six months or 1,500 hours, whichever occurs first. Refer to Section 8 of this manual for procedure.

2.24.2. PR-2 Pressure Protection Valve

Perform an operating test and leakage check of the valve at this interval. Refer to Section 8 of this manual for procedure.

2.24.3. ST-1 Safety Valve

Every six months or 1,500 operating hours perform operating and leakage test. Refer to Section 8 of this manual for test procedure.

2.24.4. SR-7 Spring Brake Modulating Valve

Perform an operating and leakage test every six months or 1,500 hours, whichever occurs first.

WARNING

DO NOT attempt to disassemble and service the valve. The valve contains high spring forces that could result in personal injury if disassembled.

2.24.4.1. Operating Test

1. Block vehicle and hold by means other than vehicle brakes.
2. Charge air system to governor cut-out pressure.
3. Place parking brake control valve in the APPLIED position. Observe that the spring brake actuators apply promptly.
4. Remove the plug from the unused delivery port and install a test pressure gauge known to be accurate.
5. Place the parking brake control valve in the RELEASE position. Observe that the spring brake actuators release fully.
6. With the parking control valve in the RELEASE position, note the gauge pressure reading. Spring brake actuator hold-off pressure should be 107 psi. If the pressure reading is incorrect, the valve must be replaced.
7. Place the parking brake control valve in the APPLIED position: The gauge reading should drop to zero promptly. A slow release of pressure, more than three seconds, would indicate faulty operation. Replace the valve.
8. Maintain the parking brake control valve in the APPLIED position and gradually apply the brake treadle. The reading on the test pressure gauge, installed in the delivery port should increase.
9. Place the parking brake control valve in the RELEASE position.
10. Drain the rear brake reservoir to zero psi.
11. Apply the brake treadle several times and note that the pressure reading on the gauge decreases each time the brake treadle is applied. After several applications, pressure on the gauge will drop to the point where release of the spring brake actuators will no longer occur.

2.24.4.2. Leakage Test

With the air system fully charged and the parking brake control valve in the RELEASE position, coat all the ports, including the exhaust port, with a soap solution. A 1" bubble in three seconds (175 SCCM) is permitted.

If the Spring Brake Modulating Valve does not function as described in the operating test, or leakage is excessive, it is recommended that the valve be replaced.

The New Flyer vehicles described in this manual may be protected by one or more patents and design applications or registrations in the United States and Canada, and in other countries. Refer to "Vehicle Patent Information" in this manual.
Copyright © 2014 New Flyer Industries Canada ULC

2.24.5. DC-4 Double Check Valve

Every six months or 1,500 operating hours perform operating and leakage test. Refer to Section 8 of this manual for test procedure.

2.24.6. RV-3 Pressure Reducing Valve

Inspect and test the pressure reducing valve every six months or 1500 operating hours, whichever occurs first. Refer to Section 8 of this manual for procedure.

2.24.7. R-14 Brake Relay Valve

Perform an operating and leakage test every six months or 1,500 operating hours.

2.24.8. Brake Foot Valve

Every six months or 1,500 operating hours perform operating and leakage test. Refer to Section 8 of this manual for test procedure. Check for physical damage such as broken air lines and missing parts.

2.24.9. Steering Knuckle

Lubricate the upper steering knuckle bearing every six months if operating under harsh winter conditions where the vehicle is exposed to salt spray or extremes of temperature. It is recommended that the upper bearing be greased before the start of the winter season, and then again immediately following the winter season. The lubrication interval may be extended to once every year or 36,000 miles (58,000 km), whichever occurs first if operating under less severe conditions. Lubricate the upper bearing as follows:

⚠CAUTION

DO NOT over-pressurize the bearing cavity when greasing the bearing, as this could cause the sealing washer, located below the circlip, to bulge outward. Replace sealing washer if distorted.

☞NOTE:

The steering knuckle is fitted with upper and lower dust caps from the factory. The upper dust cap should be removed and discarded to allow for access to the upper grease fitting for scheduled lubrication. Installation of an angled grease fitting will allow for easier access.

1. Remove the protective plastic cap from the upper grease fitting and purge-lubricate the bearing. Use only RenoLit LX-OTP-2 lubricant.

☞NOTE:

To aid purging of old grease, ensure steering knuckle and grease are at room temperature. Rotate the steering knuckle left and right while applying grease so that the old grease can escape.

2. Clean any excess grease from the steering knuckle joint as well as the area above the sealing washer.
3. Install protective plastic cap on grease fitting.
4. Use a preservation wax, such as Dinitrol 4942 or equivalent, to fill the area above the sealing washer on the upper bearing. This wax will act as a barrier and prevent any liquid from accumulating on the sealing washer.

☞NOTE:

The lower bearing is not prone to moisture ingress or grease wash-out and therefore does not need to be greased on a regular basis. The lower bearing requires greasing only if being replaced.

The New Flyer vehicles described in this manual may be protected by one or more patents and design applications or registrations in the United States and Canada, and in other countries. Refer to "Vehicle Patent Information" in this manual.
Copyright © 2014 New Flyer Industries Canada ULC

2.24.10.Power Steering Miter Box

Locate the grease fitting on the bottom of the power steering miter box. Use a manual grease gun and apply only two pumps of grease to lubricate the miter box. Do not apply excessive pressure or quantity of grease that could result in damage to seals. Refer to 2.33. "Fluid & Lubrication Guide" on page 86 in this section for lubricant specification. See "Fig. PM-34: Power Steering Miter Box Lubrication" on page 72.

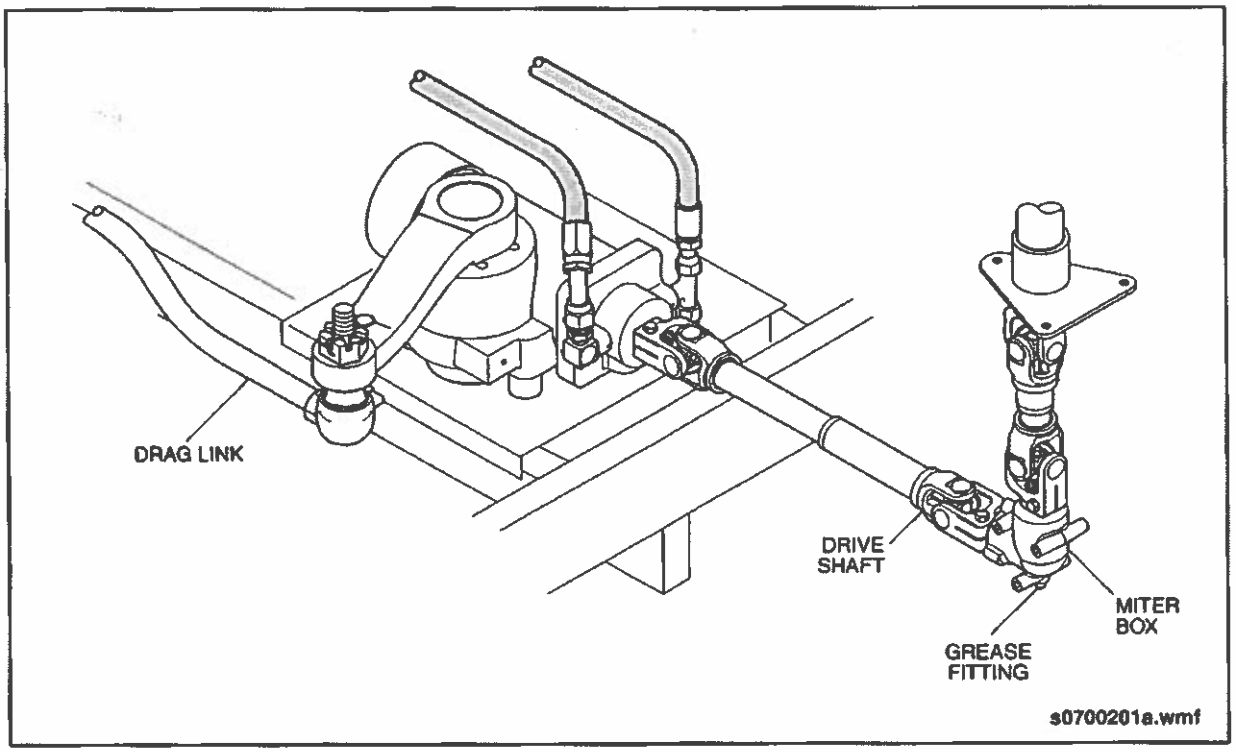

Fig. PM-34: Power Steering Miter Box Lubrication

The New Flyer vehicles described in this manual may be protected by one or more patents and design applications or registrations in the United States and Canada, and in other countries. Refer to "Vehicle Patent Information" in this manual.
Copyright © 2014 New Flyer Industries Canada ULC

2.25. Yearly Preventive Maintenance

2.25.1. Door Sensitive Edge Inspection & Test

Inspect and test the door sensitive edge function every year or 100,000 door operating cycles, whichever occurs first.

- ☐ Visually inspect door sensitive edge for cuts, tears, or other damage. Replace sensitive edge if damaged.
- ☐ Inspect for properly connect tubing from sensitive edge to pressure wave switch.
- ☐ Inspect electrical connections on pressure wave switch.
- ☐ Perform a functional test on the sensitive edge system. Refer to Section 16 of this manual for test procedure.

2.25.2. Fuel Hoses

Thoroughly inspect all fuel hoses annually for cover damage, and for damaged, worn, twisted, crimped, brittle, cracked or leaking lines. Replace hoses whose outer cover is worn through or whose metal reinforcements are damaged. Replace all hoses in or out of machinery every five years or during major overhaul.

2.25.3. Wheelchair Ramp Pump

2.25.3.1. Hydraulic Fluid

☞NOTE:

The yearly fluid change interval is based on typical transit operating conditions but may need to be adjusted to suit actual operating frequency. Periodic oil samplings may also be taken to determine fluid cleanliness.

Change fluid as follows:

1. Set Battery Disconnect switch to OFF position.
2. Suction fluid from reservoir and dispose of fluid in accordance with local regulations.
3. Disconnect hydraulic lines from ports "1" and "2" on manifold.
4. Manually operate ramp through several operating cycles to expel as much fluid as possible from the actuating cylinder and lines.
5. Inspect filters and screens. Refer to 2.25.3.2. "Screen & Filter Inspection" on page 74 in this section for replacement procedure. See "Fig. PM-35: Hydraulic Power Pack Assembly" on page 74.
6. Connect and tighten hydraulic lines to ports "1" and "2" on the manifold.
7. Fill the reservoir. Refer to 2.33. "Fluid & Lubrication Guide" on page 86 in this section for fluid specifications.
8. Manually place the ramp in the stowed position.
9. Crack open or remove the STOW line at the aft end of the cylinder.
10. Set the Battery Disconnect switch to the ON position.

⚠CAUTION

DO NOT allow the reservoir to run dry while priming the pump

11. Use the ramp DEPLOY switch to "jog" the unit through short deploy strokes, Gradually increase the length of the deploy strokes until a steady stream of fluid flows from the line without air bubbles.
12. Tighten the STOW pressure line at the aft end of the cylinder and crack open or remove the DEPLOY line at the forward end of the cylinder.
13. Use the ramp STOW switch to "jog" the unit through short stow strokes, Gradually increase the length of the stow strokes until a steady stream of fluid flows from the line without air bubbles.
14. Tighten the DEPLOY line at the forward end of the cylinder.
15. Operate the ramp through several deploy/stow cycles.
16. Top up reservoir to within 1" of filler cap.

The New Flyer vehicles described in this manual may be protected by one or more patents and design applications or registrations in the United States and Canada, and in other countries. Refer to "Vehicle Patent Information" in this manual.
Copyright © 2014 New Flyer Industries Canada ULC

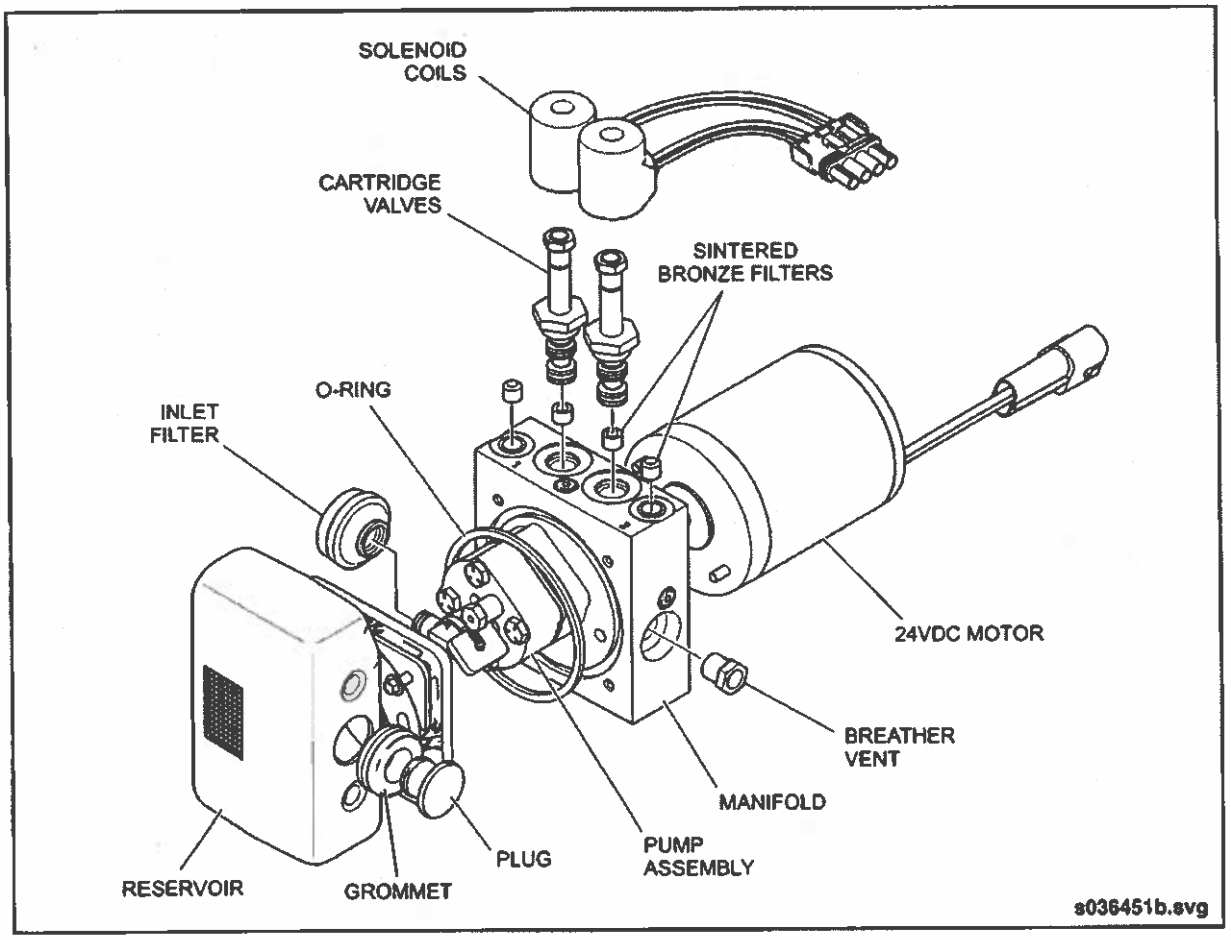

Fig. PM-35: Hydraulic Power Pack Assembly

2.25.3.2.Screen & Filter Inspection

Inspect the inlet (suction) screen as follows:

1. Separate the reservoir from the manifold by removing the four bolts and clamp plates.
2. Remove and discard the O-Ring.
3. Remove inlet filter from pump and clean or replace as necessary.
4. Install new O-Ring and install reservoir onto manifold.
5. Install four bolts with clamp plates and tighten bolts.

Inspect the manifold filters as follows:

1. Disconnect hydraulic lines from manifold ports.
2. Remove elbow fittings from manifold.
3. Use dental pick or similar tool to remove filter from each port.
4. Clean or replace filters as necessary.
5. Reinstall elbow fittings into manifold ports.
6. Install and tighten hydraulic lines.

Inspect the breather vent as follows:

1. Locate the breather vent on top of the pump manifold.
2. Use a hex socket to remove the breather vent from the manifold.
3. Clean or replace the sintered bronze filter as necessary.
4. Reinstall breather vent into manifold.

The New Flyer vehicles described in this manual may be protected by one or more patents and design applications or registrations in the United States and Canada, and in other countries. Refer to "Vehicle Patent Information" in this manual.
Copyright © 2014 New Flyer Industries Canada ULC

2.25.4. Instrument Panel & Side Console

Once yearly, inspect the interior of the instrument panel for loose wires. Inspect the interior of the side console for loose wires and chafing air lines. Refer to Section 19 of this manual for further information on these components.

2.25.5. Fire Extinguisher

Examine every 12 months to ensure extinguisher is operable. Recharge if below the specified weight or pressure is below operable range. Replace any damaged parts. Check hose for obstructions.

Record maintenance use and recharge dates on the fire extinguisher maintenance tag.

2.25.6. Air Dryer

☞NOTE:

The desiccant replacement interval is dependent on operating conditions and may need to be adjusted to suit the operating environment. The monthly preventive maintenance to drain air tanks and record moisture accumulation will aid in determining the optimum change interval for the desiccant cartridge.

Rebuild the air dryer and replace the desiccant cartridge yearly. Refer to Section 8 of this manual for procedure. See "Fig. PM-36: Air Dryer Inspection" on page 75.

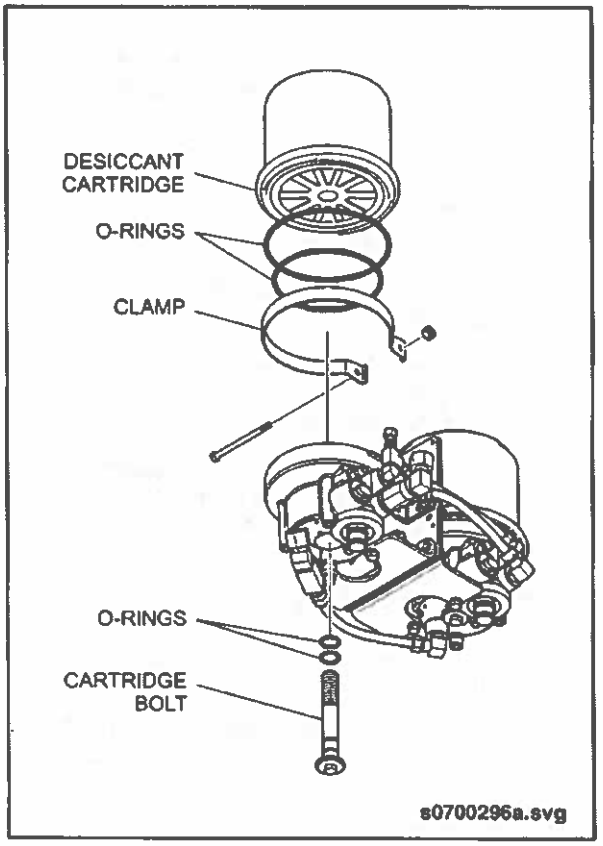

Fig. PM-36: Air Dryer Inspection

The New Flyer vehicles described in this manual may be protected by one or more patents and design applications or registrations in the United States and Canada, and in other countries. Refer to "Vehicle Patent Information" in this manual.
Copyright © 2014 New Flyer Industries Canada ULC

2.25.7. QR-1 Quick Release Valve

Perform the following operation and leakage test at every year or 1,500 hours, whichever occurs first:

1. Block the vehicle's wheels and fully charge the air system.
2. Apply the parking brake.
3. Locate the QR-1 Quick Release Valve on the front axle.
4. Apply and release the service brakes several times and observe that the brakes promptly respond at both wheels.
5. Make and hold a full brake application and apply a soap solution to the exhaust port. Leakage of a 1" bubble in 3 seconds is permissible.
6. Maintain full brake application and apply a soap solution to the body and cover. No leakage is permitted between the body and cover.
7. Repair or replace valves that do not function properly or have excessive leakage.

2.25.8. Air Strainer

Replace the air strainer every year or 36,000 miles, whichever occurs first.

1. Park the vehicle on level ground and chock the wheels.
2. Drain the air tanks.
3. Locate the air strainer on the front brake & kneeling valve panel.
4. Disconnect air line from air strainer.
5. Unthread air strainer assembly from nipple connector.
6. Remove fittings from air strainer and install in same position on new air strainer. Use Loctite 567 thread sealant on pipe threads.
7. Install new air strainer assembly on nipple connector, using Loctite 567 thread sealant on pipe threads.
8. Connect and tighten air line.
9. Charge the air system to operating pressure and check for leaks at the air strainer connections.

2.25.9. Radiator

Inspect the radiator on a yearly basis as follows:

- ☐ Inspect the main positive and negative power cables for wear or frayed insulation. Ensure the protective rubber boots are in place and in good condition.
- ☐ Check the main power cable connections for tightness and torque to 20 ft-lbs (27 Nm) if necessary.
- ☐ Inspect the condition of the inner and outer nylon bushings on the main power cable pass-through studs.
- ☐ Inspect main wiring harness and connections to TMC controller and all fans.
- ☐ Inspect fuses and fuse holders.
- ☐ Inspect support structure for any damage or loose mounting hardware.

2.25.10. Headlight Aim

Check headlight aim on a yearly basis. Refer to Section 9 of this manual for headlight aiming procedures.

The New Flyer vehicles described in this manual may be protected by one or more patents and design applications or registrations in the United States and Canada, and in other countries. Refer to "Vehicle Patent Information" in this manual.
Copyright © 2014 New Flyer Industries Canada ULC

2.26. Two Year Preventive Maintenance

2.26.1. Cooling System

⚠CAUTION

ALWAYS follow the filling and deaeration procedure when flushing the cooling system. Refer to Section 6 of this manual for procedure.

Cooling system and radiator maintenance should be performed every two years, or 80,000 miles, whichever occurs first.

2.26.1.1.Coolant

- ☐ Drain and refill the cooling system with recommended coolant. Refer to 2.33. "Fluid & Lubrication Guide" on page 86 in this section for recommended coolant.
- ☐ Clean and flush the cooling system on an "as needed" basis only. The cooling system must be cleaned and flushed if contaminants such as silicate gel, oil, grease, fuel, scale, rust, or solder bloom are found in the system. Refer to Cummins Operation and Maintenance Manual and Cummins Coolant Requirements and Maintenance Bulletin 3666132 for detailed cleaning and flushing procedures.

2.26.1.2.Radiator External Cleaning

Use the following procedure to remove any buildup of mud, salt, sand, road oils, brake lining dust, or tire rubber/carbon black from the exterior surface of the radiator:

☞NOTE:

The interval at which the radiator is removed for a soak cleaning may be adjusted to suit the actual operating environment and radiator condition.

1. Soak the radiator for 24 hours in a hot (150°F) non-caustic detergent solution with all fittings plugged.
2. Use low pressure spray equipment with cleaning solvent to clean the fin louvers.
3. Final rinse with clear water and air dry.
4. Inspect cooling fins and straighten to the original geometry using needle nose pliers or a fin comb.

2.26.2. Alternator Bearing Replacement

☞NOTE:

The two year maintenance interval is based on vehicles operating on a 16-18 hour day, six days a week and may need to be adjusted depending on actual operating conditions and previous maintenance history. A more frequent maintenance interval may be required for vehicles operating under a severe duty cycle or operating in conditions where the alternator is exposed to prolonged periods of high engine compartment temperatures.

Replace the front and rear alternator bearing every two years. Refer to Section 9 of this manual for bearing replacement procedure.

The New Flyer vehicles described in this manual may be protected by one or more patents and design applications or registrations in the United States and Canada, and in other countries. Refer to "Vehicle Patent Information" in this manual.
Copyright © 2014 New Flyer Industries Canada ULC

2.26.3. Door System Inspection

Perform the following inspection/maintenance on the major door system components every two years or 250,000 door operating cycles, whichever occurs first:

2.26.3.1. Connecting Rods & Rod End Bearings

- ❒ Visually inspect the fore and aft connecting rods on the baseplate for evidence of bending or distortion. Replace damaged connecting rods.
- ❒ Check jam nuts on the rod ends for tightness.
- ❒ Check for excessive play in the rod ends. Replace worn rod ends.
- ❒ Lubricate rod ends with a few drops of SAE #20 oil. See "Fig. PM-37: Entrance Door Baseplate Lubrication" on page 78. See "Fig. PM-38: Exit Door Baseplate Lubrication" on page 79.

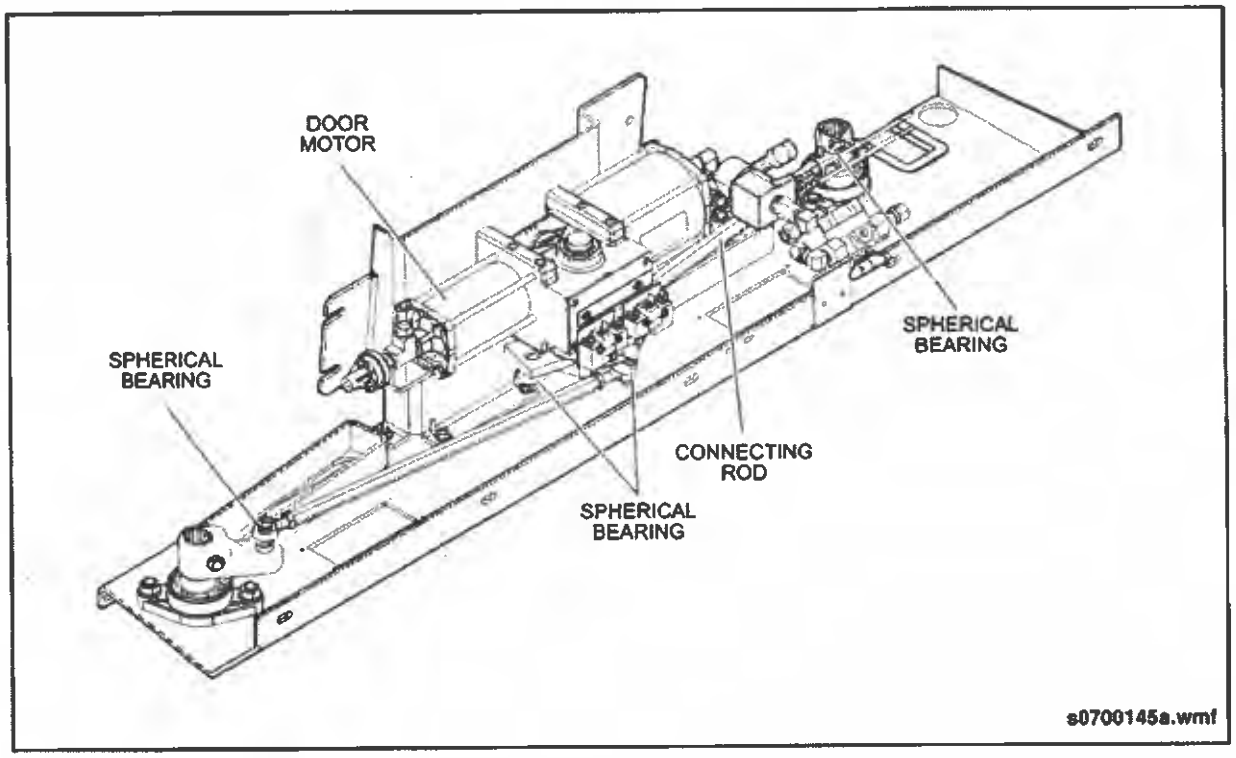

Fig. PM-37: Entrance Door Baseplate Lubrication

The New Flyer vehicles described in this manual may be protected by one or more patents and design applications or registrations in the United States and Canada, and in other countries. Refer to "Vehicle Patent Information" in this manual.
Copyright © 2014 New Flyer Industries Canada ULC

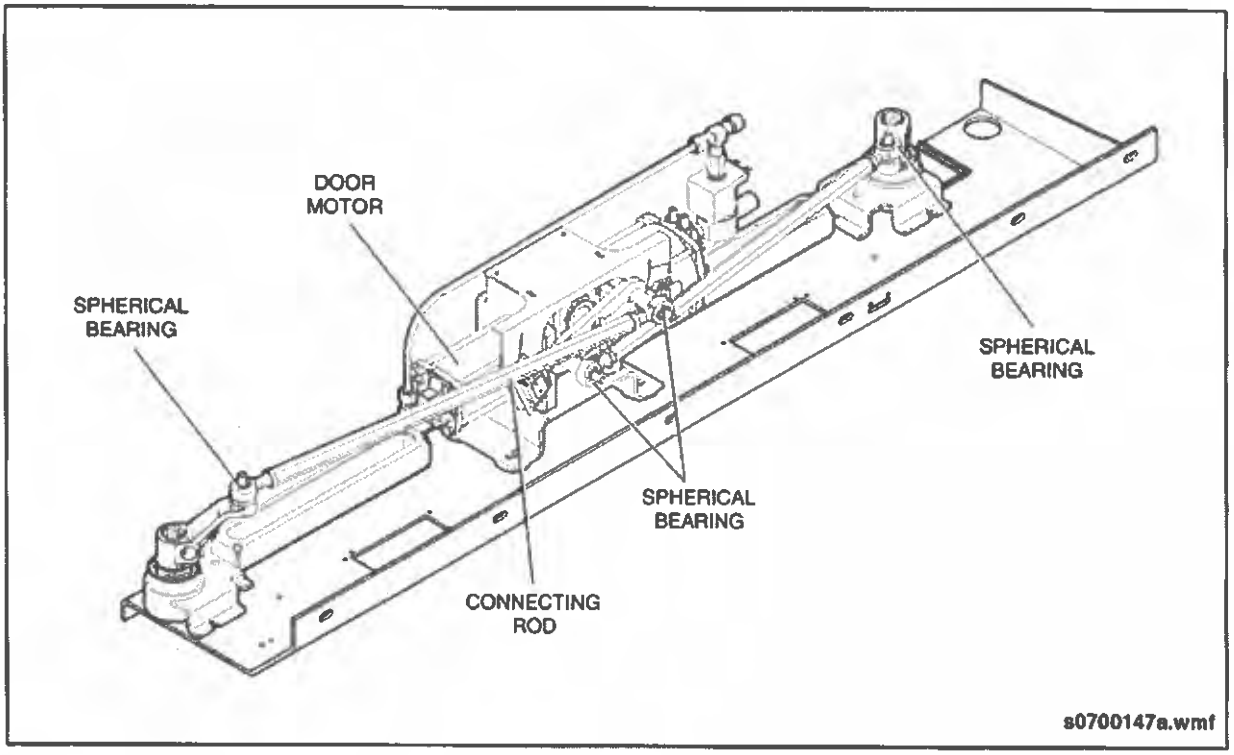

Fig. PM-38: Exit Door Baseplate Lubrication

2.26.3.2.Door Shaft Levers & Mounting Hardware

- ☐ Visually inspect the levers on the upper door shaft for worn splines, cracks or other damage. Replace damaged parts.
- ☐ Check lever clamp bolt (wedge & screw) for tightness.

2.26.3.3.Upper Door Shaft Pivot Bearings

The upper door shaft pivot bearings locate directly on the door baseplate. Check for smooth rotation of door shafts without binding, noise, or excessive radial or axial play. Replace worn or damaged bearings. These are sealed ball bearing assemblies and do not require lubrication.

2.26.3.4.Lower Door Shaft Pivot Bearing

The lower door shaft pivot bearing assemblies are bolted to the vehicle floor and support the door shaft. A spherical bearing rides inside a plain bushing within the lower end of the door shaft. Check for excessive radial play between pivot bearing and the door shaft bushing. Replace pivot bearing and/or bushing if wear exceeds 0.060". DO NOT lubricate pivot bearing.

2.26.3.5.Upper Roller Guide, Brackets, & Bearings

The upper roller bracket assembly is bolted to the door panel and consists of a roller mounted on the shaft of the bracket. The roller tracks within the roller channel (slotted guide) of the baseplate.

- ☐ Manually open the door panel, ensuring that the roller operates smoothly within the roller channel of the baseplate.
- ☐ Inspect the roller for wear or flat spots. DO NOT lubricate the outer surface of the roller.
- ☐ Inspect the bearing shaft on the bracket for wear or scoring. Lubricate the bearing shaft with SAE #20 oil, but DO NOT lubricate the outer surface of the roller.
- ☐ Clean the roller channel in the baseplate but DO NOT lubricate channel.

The New Flyer vehicles described in this manual may be protected by one or more patents and design applications or registrations in the United States and Canada, and in other countries. Refer to "Vehicle Patent Information" in this manual.
Copyright © 2014 New Flyer Industries Canada ULC

2.26.3.6.Entrance Door Shaft & Arm Assembly

The upper end of the door shaft consists of a splined shaft with a connecting arm and rod end. The lower end of the door shaft consists of a hollow shaft with a connecting arm and hinged mounting bracket. See "Fig. PM-39: Entrance Door Shaft & Arm Assembly" on page 80.

- ☐ Check door shaft and arm assemblies for any evidence of bending, twisting, or other physical damage. Repair or replace damaged door shaft and arm assemblies as required.
- ☐ Inspect splines on upper end of door shaft for wear, cracks, or other damage. Replace damaged door shaft.
- ☐ Clean the rod end and mounting bracket areas on the upper and lower ends of the door shaft using a clean dry cloth. DO NOT lubricate the sealed spherical bearings on rod ends.
- ☐ Inspect upper and lower mounting brackets for any damage and ensure that they are securely mounted to the door panel.
- ☐ Inspect rod end and shoulder bolt for wear or damage. Replace rod end and/or shoulder bolt if worn or damaged.

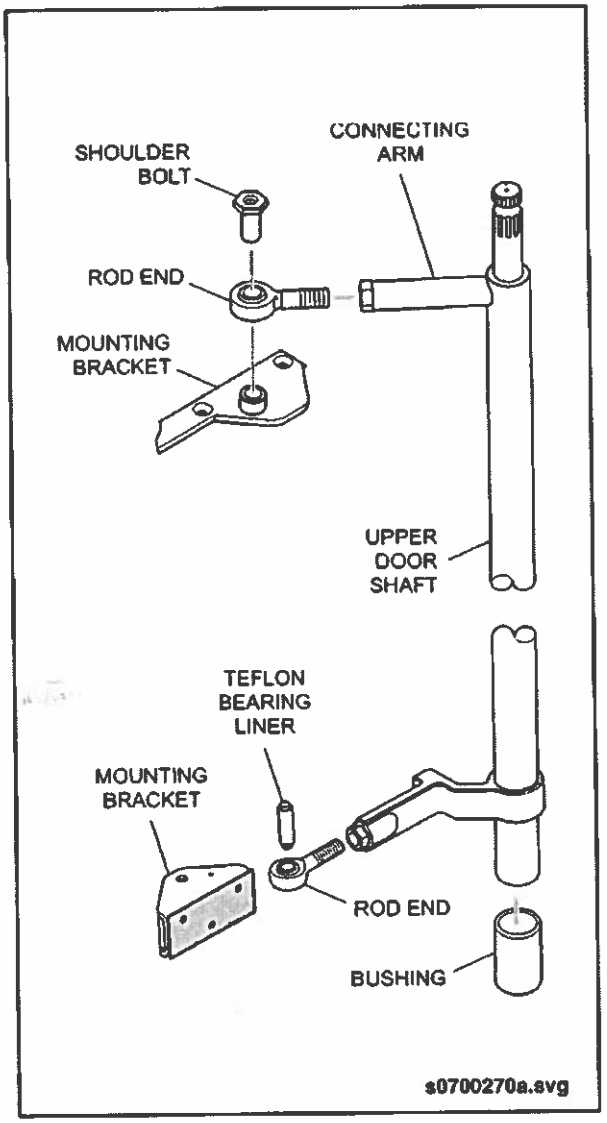

Fig. PM-39: Entrance Door Shaft & Arm Assembly

The New Flyer vehicles described in this manual may be protected by one or more patents and design applications or registrations in the United States and Canada, and in other countries. Refer to "Vehicle Patent Information" in this manual.
Copyright © 2014 New Flyer Industries Canada ULC

2.26.3.7.Exit Door Shaft & Arm Assembly

- ☐ The upper and lower hinged mounting brackets attach the door shaft and arm assembly to the exterior side of the door panel. A lubrication fitting is provided on the hinged mounting bracket to allow lubrication of the flanged bronze bushing from the exterior of the vehicle. See "Fig. PM-40: Exit Door Shaft" on page 81. Check door shaft and arm assemblies for any evidence of bending, twisting, or other physical damage. Repair or replace damaged door shaft and arm assemblies as required.
- ☐ Inspect splines on upper end of door shaft for wear, cracks, or other damage. Replace damaged door shaft.
- ☐ Inspect hinged mounting bracket for excessive play.
- ☐ Inspect flanged bronze bushing and pin for wear or scoring. Replace flanged bushing and pivot pin if worn or damaged.
- ☐ Lubricate hinged mounting bracket at grease fitting, using a high pressure, low temperature (-40° F) grease.

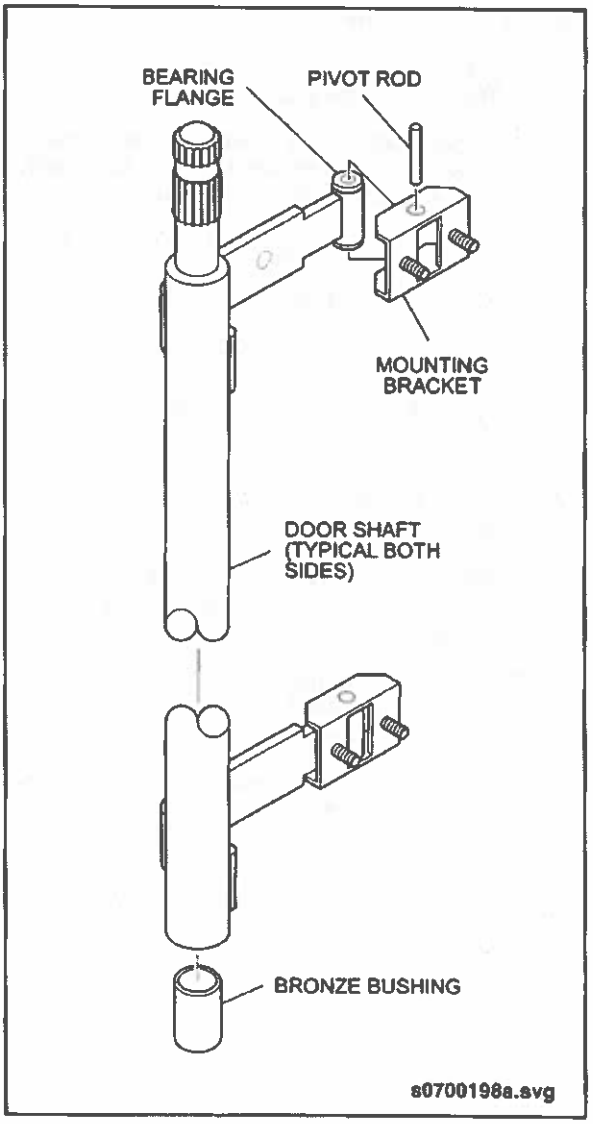

Fig. PM-40: Exit Door Shaft

The New Flyer vehicles described in this manual may be protected by one or more patents and design applications or registrations in the United States and Canada, and in other countries. Refer to "Vehicle Patent Information" in this manual.
Copyright © 2014 New Flyer Industries Canada ULC

2.26.3.8.Door Panels

- ❒ Inspect door panels for structural damage. Repair or replace panel if required.
- ❒ Inspect exterior door panel pocket seals for cuts, tears, excessive wear, or other damage. Replace pocket seals if required.
- ❒ Inspect leading edge and door jamb seals for cuts, tears, excessive wear, or other damage. Replace if required.
- ❒ Apply a light film of silicone lubricant on the mating surfaces of the leading edge and door jamb seals and wipe clean with a dry cloth.

2.26.3.9.Door Panel Top & Bottom Seal Assemblies

- ❒ Inspect for damage to brush bristles or rubber seal strip. Replace brush if bristles are damaged.
- ❒ Adjust height of top brush to provide light contact only with the top edge of door panels so as to prevent binding.
- ❒ Adjust height of bottom brush to provide light contact only with the top surface of the flooring so as to prevent binding.

2.26.3.10.Door Operator Limit Switches

- ❒ Check that the limit switches function properly.
- ❒ Inspect electrical connections. Repair loose connections.
- ❒ Adjust switch actuation point and overtravel for limit switches Refer to Section 16 of this manual for adjustment procedures.

2.26.3.11.Solenoid Valves

- ❒ Check for proper operation.
- ❒ Inspect electrical connections.
- ❒ Inspect air lines to solenoid and ensure connections are tight.

2.26.3.12.Driver's Door Controller

- ❒ Operate the door controller through all positions and check for proper function.
- ❒ Verify that the door controller moves freely without binding. Use a spring scale to measure torque required to rotate controller. Replace door controller if torque exceeds 15 in-lbs.

The New Flyer vehicles described in this manual may be protected by one or more patents and design applicabons or registrations in the United States and Canada, and in other countries. Refer to "Vehicle Patent Information" in this manual.
Copyright © 2014 New Flyer Industries Canada ULC

2.27. Three Year Preventive Maintenance

2.27.1. Under Body Inspection

Refer to Section 11 of this manual for procedure.

2.28. Five Year Preventive Maintenance

2.28.1. Door Motor Rebuild

The door motor (differential engine) should be disassembled, cleaned, inspected, and re-lubricated every five years or 500,000 door operating cycles, whichever occurs first. Refer to Section 16 of this manual for rebuild procedure.

2.28.2. Door Component Replacement

It is recommended that the following door components or assemblies be replaced every five years or 500,000 door operating cycles. The replacement interval may need to be adjusted depending on the actual operating conditions. Operating in a harsh environment where the door components are exposed to extremes in temperature, salt spray, sand, grit, or other contaminants will shorten the life expectancy of the door system components.

- ☐ Connecting rods and rod end bearings
- ☐ Upper door shaft pivot bearings
- ☐ Door panel top seal assembly
- ☐ Door panel bottom seal assembly
- ☐ Door panel pocket seals
- ☐ Solenoid valves
- ☐ Sensitive edge system including door edge, transfer tube, pressure wave switch, and mechanical limit switches.

2.29. Six Year Preventive Maintenance

2.29.1. Fire Extinguisher

Inspect the fire extinguisher every six years. Clean all parts to ensure they are operable and refill with new powder and repressurize. Refer to National Fire Protection Association (NFPA) Standard No.10 for additional information.

The New Flyer vehicles described in this manual may be protected by one or more patents and design applications or registrations in the United States and Canada, and in other countries. Refer to "Vehicle Patent Information" in this manual.
Copyright © 2014 New Flyer Industries Canada ULC

2.30. Ten Year Preventive Maintenance

2.30.1. Door Component Replacement

It is recommended that the following door components or assemblies be replaced every ten years or 1,000,000 door operating cycles. The replacement interval may need to be adjusted depending on the actual operating conditions. Operating in a harsh environment where the door components are exposed to extremes in temperature, salt spray, sand, grit, or other contaminants will shorten the life expectancy of the door system components.

- ☐ Door operator/differential engine
- ☐ Door shaft levers and mounting hardware
- ☐ Lower door shaft pivot bearings
- ☐ Upper roller guides, brackets, & bearings
- ☐ Door panel leading edge seals
- ☐ Door panel jamb seals
- ☐ Driver's door controller
- ☐ Door panels
- ☐ Shaft and arm assemblies
- ☐ Shaft and arm assembly hinged mounting brackets.

2.31. Twelve Year Preventive Maintenance

2.31.1. Fire Extinguisher

Hydrostatically test the fire extinguisher every twelve years. Refer to label on fire extinguisher for test pressure. Clean all parts to ensure they are operable and refill with new powder and repressurize. Record maintenance and recharge date on fire extinguisher inspection tag. Refer to National Fire Protection Association (NFPA) Standard No.10 for additional information.

The New Flyer vehicles described in this manual may be protected by one or more patents and design applications or registrations in the United States and Canada, and in other countries. Refer to "Vehicle Patent Information" in this manual.
Copyright © 2014 New Flyer Industries Canada ULC

2.32. Fluid & Lubrication Points

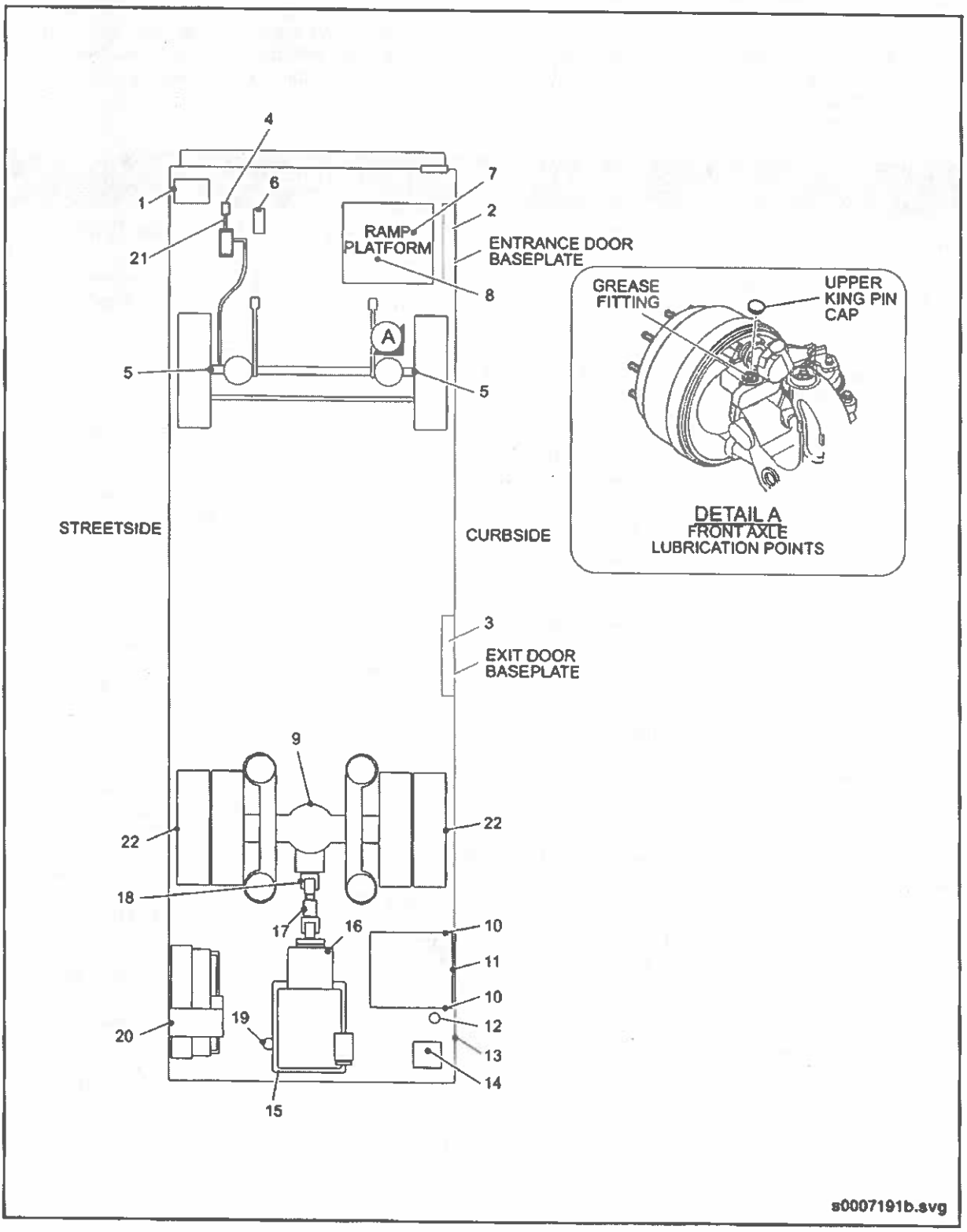

Fig. PM-41: Fluid & Lubrication Points

The New Flyer vehicles described in this manual may be protected by one or more patents and design applications or registrations in the United States and Canada, and in other countries. Refer to "Vehicle Patent Information" in this manual.
Copyright © 2014 New Flyer Industries Canada ULC

2.33. Fluid & Lubrication Guide

The following Guide is a convenient reference for the lubrication points on your New Flyer vehicle. It provides component locations, lubrication procedures and intervals, and lubricant types. Further preventive maintenance information on each component in this Guide can be found in this section of the manual under the component's specific maintenance interval. See "Fig. PM-41: Fluid & Lubrication Points" on page 85.

FLUID & LUBRICATION GUIDE

Item	Component	Procedure	Interval	Lube Type
1	Windshield Washer Bottle		Fill bottle as required	Methylene Alcohol Windshield Washer Fluid
2	Entrance Door Baseplate	Lubricate connecting rod spherical bearings (4 bearings)	Every two years	SAE 20
		Lubricate upper bracket bearing shaft	Every two years	SAE 20
3	Exit Door Baseplate	Lubricate connecting rod spherical bearings (4 bearings)	Every two years	SAE 20
		Lubricate upper bracket bearing shaft	Every two years	SAE 20
		Lubricate door shaft hinged mounting bracket at grease fitting	Every two years	High pressure, low temperature (-40°F) grease
4	Power Steering Miter Box	Refer to 2.24.10. "Power Steering Miter Box" on page 72 in this section for procedure	Every six months	Calcium sulfonate complex grease such as Petro Canada Peerless LLC or equivalent
5	Upper Steering Knuckle Bearing	Refer to 2.24.9. "Steering Knuckle" on page 71 in this section for procedure	Every 6 months or 30,000 miles (48,000 km)	Special-Purpose Grease. Refer to 2.33.2. "MAN Axle Approved Greases" on page 90 in this section for listing
6	Brake Treadle & Foot Valve Assembly	Lubricate brake valve plunger	Every 24,000 miles (38,600 km)	Barium Grease
7	Wheelchair Ramp Mechanism	Lubricate chains, teflon bearings, bronze bushings, and all sliding surfaces	Every six months	White Lithium Grease (Aerosol Spray)

The New Flyer vehicles described in this manual may be protected by one or more patents and design applications or registrations in the United States and Canada, and in other countries. Refer to "Vehicle Patent Information" in this manual.
Copyright © 2014 New Flyer Industries Canada ULC

FLUID & LUBRICATION GUIDE				
Item	**Component**	**Procedure**	**Interval**	**Lube Type**
8	Wheelchair Ramp Reservoir	Check fluid	Every 6,000 miles (9,600 km)	DEXRON® - III
		Change fluid	Yearly	DEXRON® - III
9	Rear Axle Carrier	Check for leaks under vehicle	Daily	Mineral-Based Extreme Pressure Gear Oil. Refer to 2.33.1. "MAN Axle Approved Mineral Oils" on page 90 in this section for listing
		Check oil level at carrier fill plug	Check at first 3,000 miles (4,800 km), thereafter every 6,000 miles (9,600 km)	
		Change Oil	Drain & change upon receipt of vehicle, and thereafter change every 36,000 miles (58,000 km) for "hot region" operation. Refer to 2.2. "Rear Axle Operating Conditions" on page 2 in this section for definition. Change every 54,000 miles (87,000 km) for "moderate region" operation. Refer to 2.2. "Rear Axle Operating Conditions" on page 2 in this section for definition.	
10	Battery Slides	Check & keep clean	Every 6,000 miles (9,600 km)	Multi-Purpose Grease
11	Battery Terminals	Check & apply lubricant as required	Every 6,000 miles (9,600 km)	Dielectric grease such as TruckLite NYK-77
12	Diesel Exhaust Fluid Filter	Change filter	Every 200,000 miles (321,000 km)	API Certified Stabilized Urea Premix meeting ISO 22241-1 standard
13	Diesel Exhaust Fluid Tank	Check fluid & fill as required using pressure fill port	Daily	API Certified Stabilized Urea Premix meeting ISO 22241-1 standard

The New Flyer vehicles described in this manual may be protected by one or more patents and design applications or registrations in the United States and Canada, and in other countries. Refer to "Vehicle Patent Information" in this manual.
Copyright © 2014 New Flyer Industries Canada ULC

FLUID & LUBRICATION GUIDE				
Item	**Component**	**Procedure**	**Interval**	**Lube Type**
14	Power Steering Reservoir	Check fluid level through sight glass	Daily	DEXRON®-III
		Change filter	Every 18,000 miles (29,000 km)	DEXRON®-III
		Change fluid	Every 36,000 miles (58,000 km)	DEXRON®-III
15	Engine	Check dipstick level	Daily	Chevron Delo 400 LE 15W-40 (API CJ-4)
		Drain & refill	Every 6,000 miles (9,600 km)	Chevron Delo 400 LE 15W-40 (API CJ-4)
16	Transmission	Check dipstick level	Daily	TranSynd™ Synthetic Transmission Fluid
		Drain & refill	Change both filters every 75,000 miles (120,000 km), 3,000 hrs., or 36 months & top up fluid. Change the fluid every 150,000 miles (240,000 km), 6,000 hrs., or 48 months. Refer to 2.22. "150,000 Miles (241,400 km) Preventive Maintenance" on page 66 in this section for procedure.	
17	Driveshaft Slip Joint	Refer to 2.9.4. "Driveshaft" on page 15 in this section for procedure	Upon receipt of vehicle, and thereafter every 6,000 miles (9,600 km)	Extreme Pressure Grease meeting NLGI Grade 2 specification with operating temperature range of 325°F to -10°F (163°C to -23°C). Use CITGO Lithoplex RT-2 or equivalent
18	Driveshaft U-Joints	Refer to 2.9.4. "Driveshaft" on page 15 in this section for procedure	Upon receipt of vehicle, and thereafter every 6,000 miles (9,600 km)	Extreme Pressure Grease meeting NLGI Grade 2 specification with operating temperature range of 325°F to -10°F (163°C to -23°C). Use CITGO Lithoplex RT-2 or equivalent
19	Engine Oil Filters	Replace (full-flow, spin-on)	Every 6,000 miles (9,600 km)	Chevron Delo 400 LE 15W-40 (API CJ-4)

The New Flyer vehicles described in this manual may be protected by one or more patents and design applications or registrations in the United States and Canada, and in other countries. Refer to "Vehicle Patent Information" in this manual.
Copyright © 2014 New Flyer Industries Canada ULC

FLUID & LUBRICATION GUIDE				
Item	**Component**	**Procedure**	**Interval**	**Lube Type**
20	Surge Tank	Check sight glass	Daily	Old World Industries/ Peak FleetCharge® with Bitrex
		Drain & fill cooling system. Flush only if required	Every two years or 80,000 miles (128,000 km)	Old World Industries/ Peak FleetCharge® with Bitrex
21	Steering Driveshafts	Purge lubricate at grease fittings. Refer to 2.9.6. "Steering Driveshafts" on page 18 in this section for procedure	Every 6,000 miles (9,600 km)	Extreme Pressure Grease meeting NLGI Grade 2 specification with operating temperature range of 325°F to -10°F (163°C to -23°C). Use CITGO Lithoplex RT-2 or equivalent
22	Rear Axle Wheel Bearing	Refer to Section 2 of this manual for lubrication procedure	Whenever rear axle bearing or seals are being serviced	Special-Purpose Grease. Refer to 2.33.2. "MAN Axle Approved Greases" on page 90 in this section for listing

☞NOTE:

Moderate regions are defined as geographic locations where the average monthly temperature does not exceed 25°C (77°F) for more than two months of the year.

Hot regions are defined as geographic locations where the average monthly temperature exceeds 25°C (77°F) for more than two months of the year.

The New Flyer vehicles described in this manual may be protected by one or more patents and design applications or registrations in the United States and Canada, and in other countries. Refer to "Vehicle Patent Information" in this manual.
Copyright © 2014 New Flyer Industries Canada ULC

2.33.1. MAN Axle Approved Mineral Oils

Lubricants used in the rear axle must meet MAN specifications. Oil composition and additives are critical to maintaining the designed operating life of the axle components. The use of unapproved oils has been shown to accelerate the wear rate of internal components and shorten the overall lifespan of the axle. The use of unapproved oils will void the warranty coverage on the axle. The following table provides a list of approved oils that are available in North America.

MAN AXLE APPROVED MINERAL OILS

Product Brand Name (Viscosity)	MAN Specification
Mobilube HD Plus (SAE 80W-90)	MAN 342 M1
Castrol Axle EPX 90 (SAE 80W-90)	MAN 342 M1
Shell Spirax MB 90 (SAE 80W-90)	MAN 342 M1
Petro Canada TRAXON XL Synthetic Blend (SAE 75W-90	MAN 342 M1

2.33.2. MAN Axle Approved Greases

The lubricants used on MAN axles are special-purpose greases that meet the requirements of the specific application and must not be substituted with alternate grease products. The following table provides a list of approved greases that are available in North America.

MAN AXLE APPROVED GREASES

Application	Product Brand Name	MAN Specification
Front Axle Steering Knuckle	Fuchs Renolit LX-OTP 2	
Rear Axle Wheel Bearing	Fuchs Renolit LX-PEP 2	MAN 284 Li-H2
	Fuchs Renolit LX-NHU 2	MAN 284 Li-H2

The New Flyer vehicles described in this manual may be protected by one or more patents and design applications or registrations in the United States and Canada, and in other countries. Refer to "Vehicle Patent Information" in this manual.
Copyright © 2014 New Flyer Industries Canada ULC

DRIVER'S	EMPLOYEE #	HIRE DATE	ROUTES
AUZENNE DANIEL	1770	9/29/2009	ADA
BAKER BRANDIE	2449	4/16/2018	PARK & RIDE
BELL TERRANCE	1737	6/1/2009	LAMARQUE
CHARLES ALFREDO	2340	2/1/2017	GATOR
COLLINS CLIFF	1886	8/29/2011	PARK & RIDE
CORTEZ ROBERT	1738	2/16/2017	GREEN
CRAWFORD BONNIE	2287	7/21/2016	ADA/ORG. W
ELLSWORTH MYESHA	2453	5/7/2018	PARK & RIDE
GARNEAU TERESA	2107	9/2/2014	TC DICKINSON
HART KAREN	2286	7/21/2016	PARK & RIDE
HINOJOSA JESSICA	2456	5/21/2018	ADA
JACK ISREAL	1686	10/27/2008	ADA/VETS
JOHNSON CHARLES	2343	2/16/2017	ORANGE E.
LONG ROBERT	1919	6/5/2012	BACLIFF
MARTINEZ ANGEL	2117	9/18/2014	ADA
MCKENZIE JEFF	1888	8/29/2011	PARK & RIDE
TODD OREATHA	1687	10/27/2008	ADA
OFFICE STAFF			
RITA DOUGLAS	1371	4/9/2012	
CHRISTINA GRAVES	1899	8/12/2013	
DIANE JONES	559	10/19/1994	

DRIVER'S		
ACEVES JUANITA		
ANDERSON STEPHANIE		
AUZENNE DANIEL		
BELL TERRANCE		
CHARLES ALFREDO		
COLLINS CLIFF		
CORTEZ ROBERT		
CRAWFORD BONNIE		
GARNEAU TERESA		
HART KAREN		
JACK ISREAL		
JOHNSON CHARLES		
LONG ROBERT		
MARTINEZ ANGEL		
MCKENZIE JEFF		
TODD OREATHA		
OFFICE STAFF		
DOUGLAS RITA		
GRAVES CHRISTINA		
JONES DIANE		